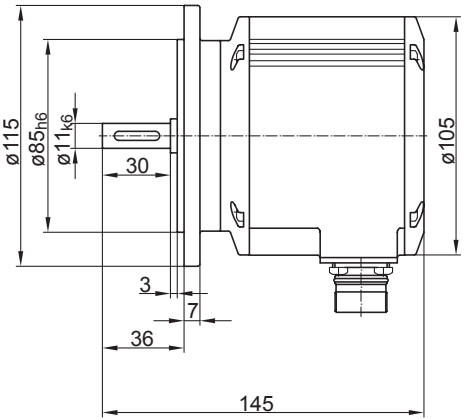
ø115
ø85h6
ø11k6
30
ø105
3
7
36
145

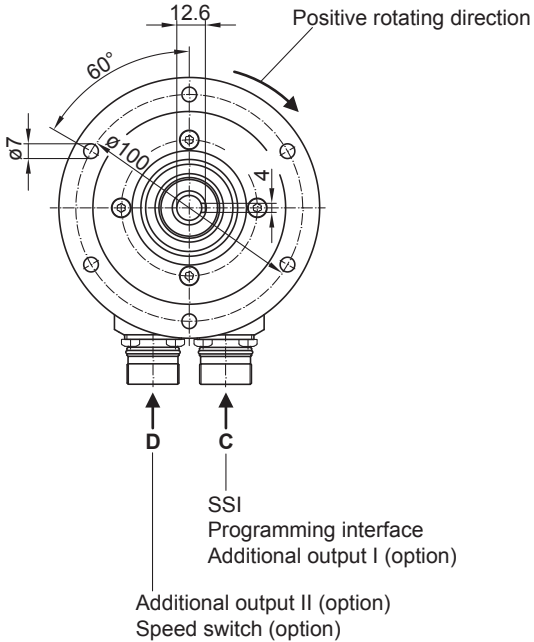
12.6
Positive rotating direction
60°
ø7
ø100
4
D
C
SSI
Programming interface
Additional output I (option)
Additional output II (option)
Speed switch (option)