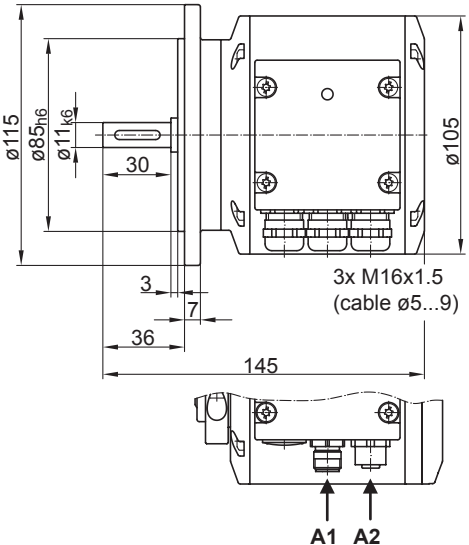
ø115
ø85h6
ø11k6
30
ø105
3
7
36
145
3x M16x1.5
(cable ø5...9)
A1
A2

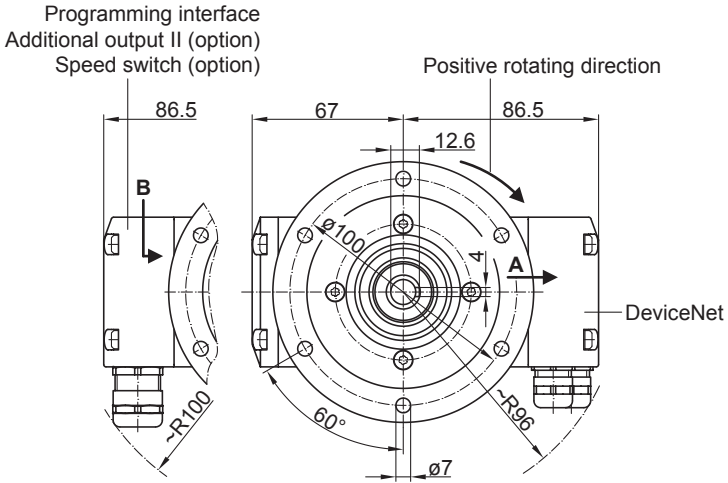
Programming interface
Additional output II (option)
Speed switch (option)
Positive rotating direction
86.5
67
86.5
12.6
B
A
ø100
4
DeviceNet
~R100
60°
~R96
ø7