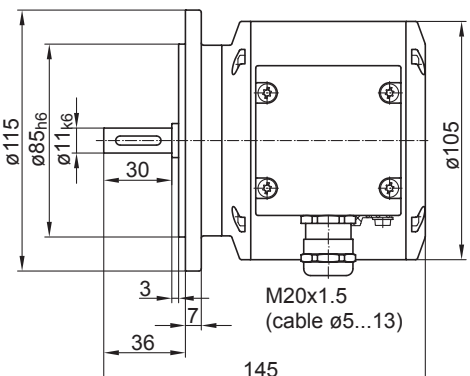
ø115
ø85h6
ø11k6
30
3
7
36
145
M20x1.5
(cable ø5...13)
ø105

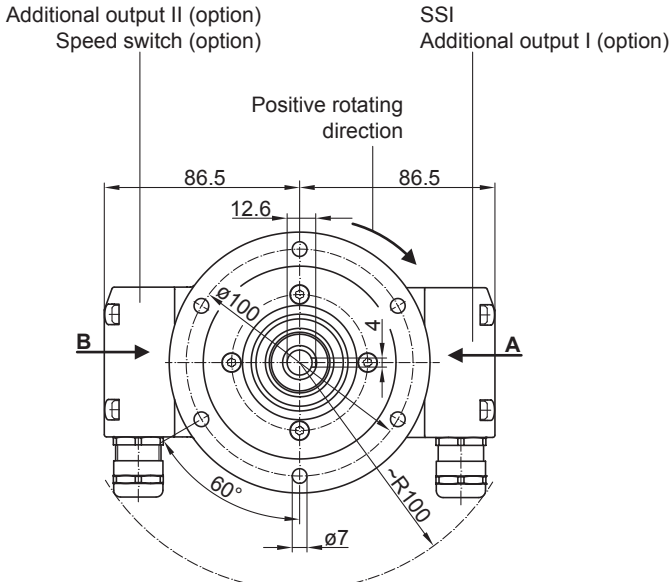
Additional output II (option)
Speed switch (option)
SSI
Additional output I (option)
Positive rotating
direction
86.5
86.5
12.6
ø100
4
B
A
60°
~R100
ø7