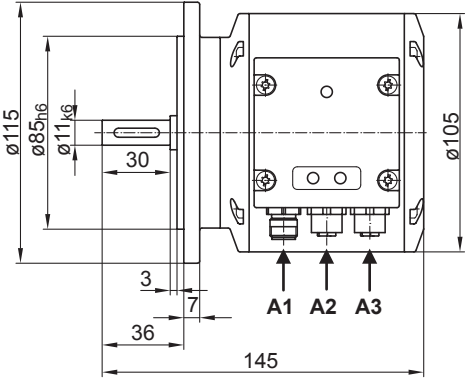
ø115
ø85h6
ø11k6
30
3
7
36
145
ø105
A1
A2
A3

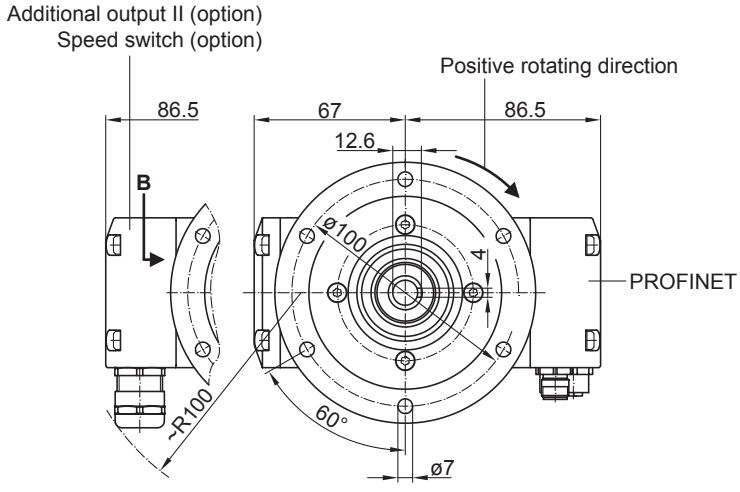
Additional output II (option)
Speed switch (option)
Positive rotating direction
86.5
67
86.5
12.6
B
ø100
4
PROFINET
~R100
60°
ø7