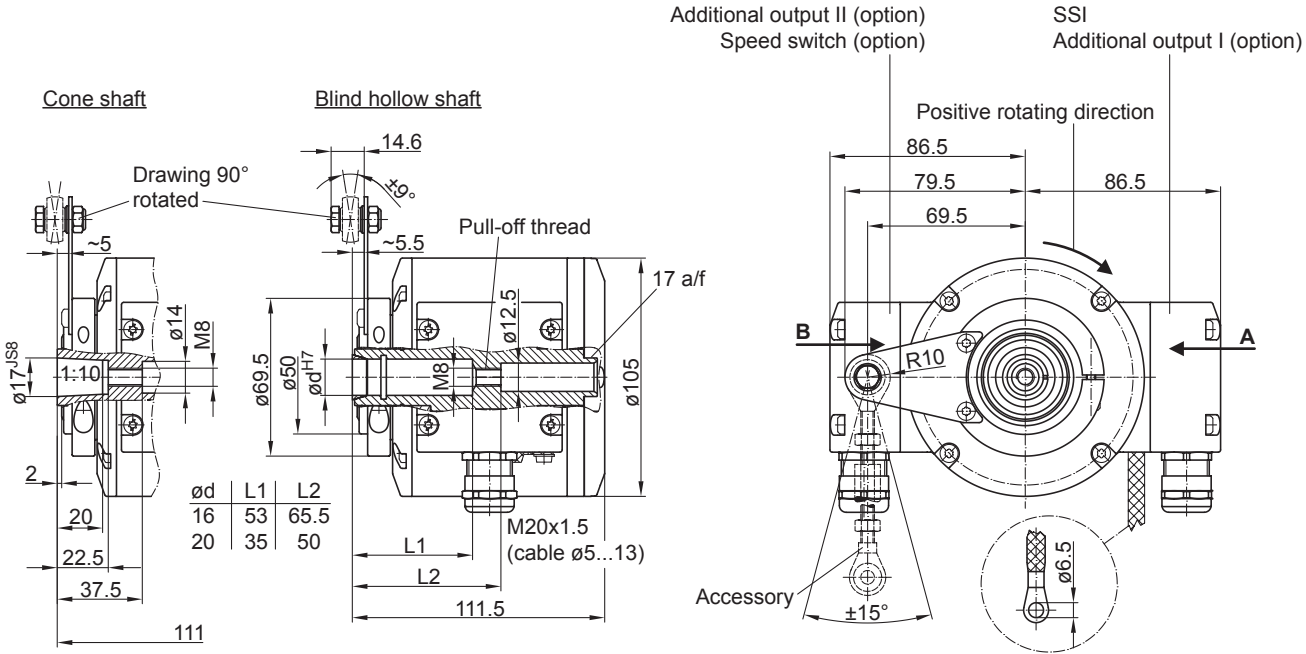
Cone shaft
Blind hollow shaft
Drawing 90° rotated
14.6
±9°
~5
~5.5
Pull-off thread
17 a/f
ø14
M8
ø17 JS8
1:10
ø69.5
ø50
ød H7
M8
ø12.5
ø105
2
20
22.5
37.5
111
L1
L2
111.5
M20x1.5
(cable ø5...13)
ød | L1 | L2
16 | 53 | 65.5
20 | 35 | 50
Additional output II (option)
Speed switch (option)
SSI
Additional output I (option)
Positive rotating direction
86.5
79.5
86.5
69.5
B
A
R10
Accessory
±15°
ø6.5