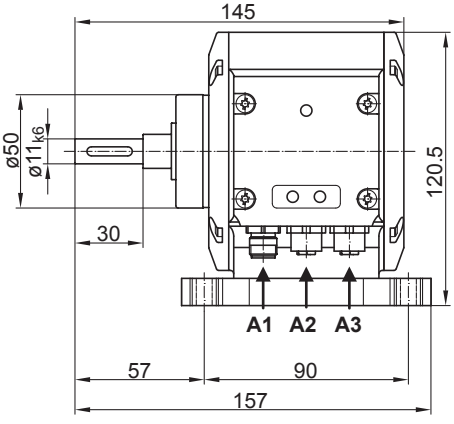
145
ø50
ø11k6
30
120.5
A1
A2
A3
57
90
157

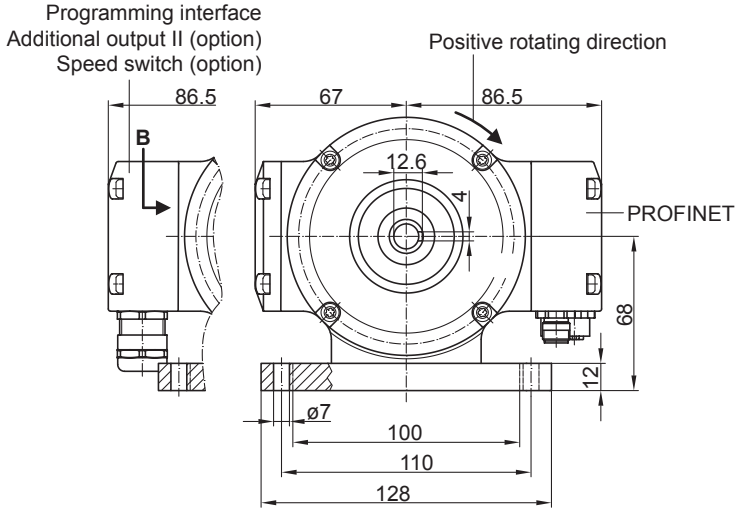
Programming interface
Additional output II (option)
Speed switch (option)
Positive rotating direction
86.5
67
86.5
B
12.6
4
PROFINET
68
12
ø7
100
110
128