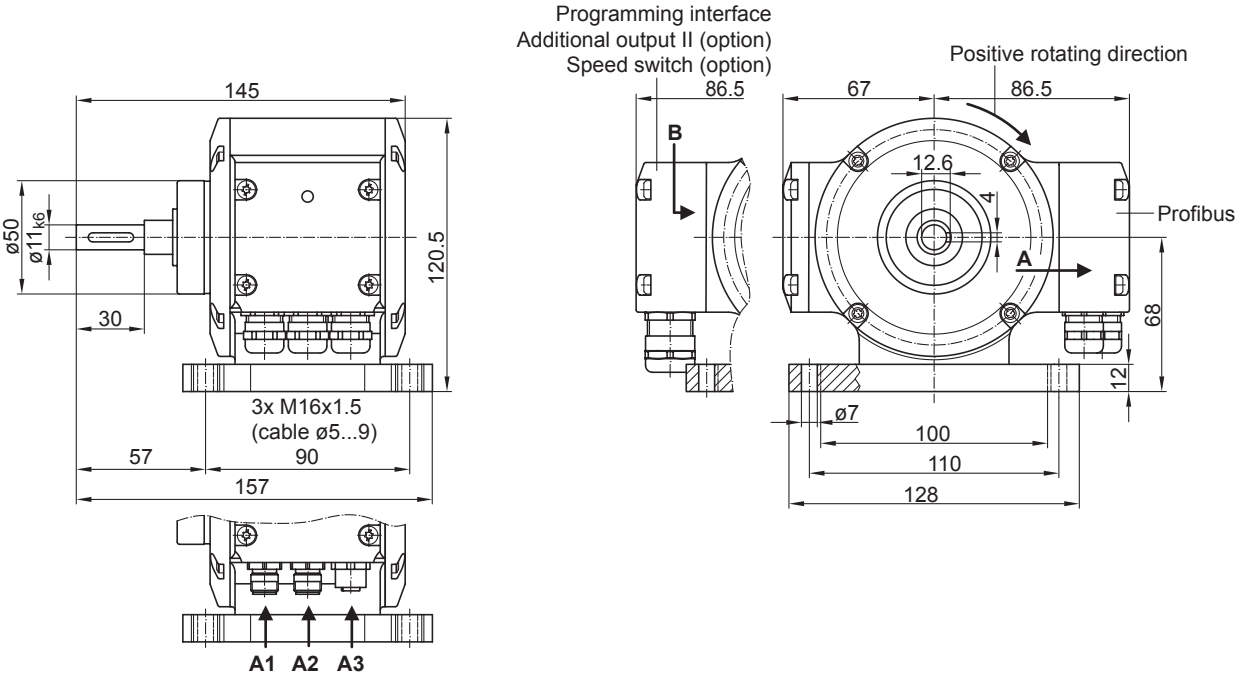
Programming interface
Additional output II (option)
Speed switch (option)
Positive rotating direction
145
86.5
67
86.5
B
12.6
4
Profibus
A
ø50
ø11k6
120.5
30
68
12
3x M16x1.5
(cable ø5...9)
ø7
100
110
128
57
90
157
A1 A2 A3