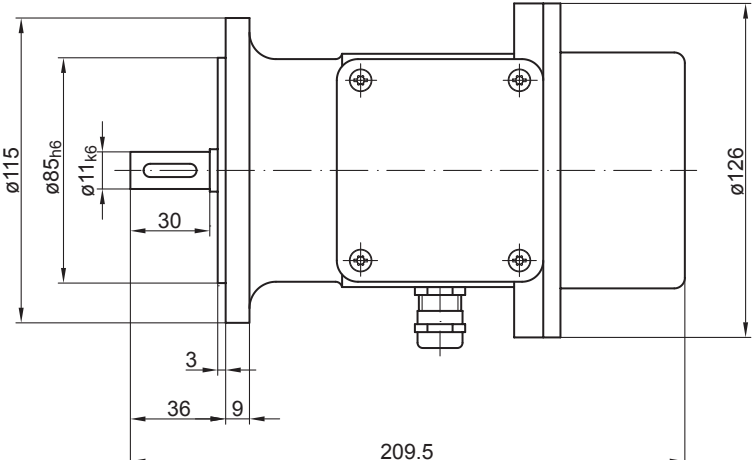
ø115
ø85h6
ø11k6
30
3
36
9
209.5
ø126

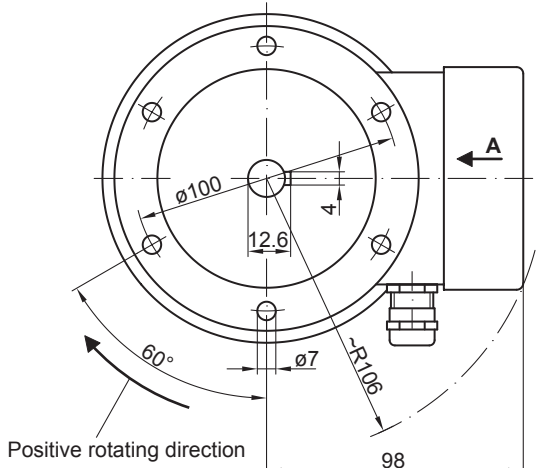
A
ø100
4
12.6
60°
ø7
~R106
Positive rotating direction
98