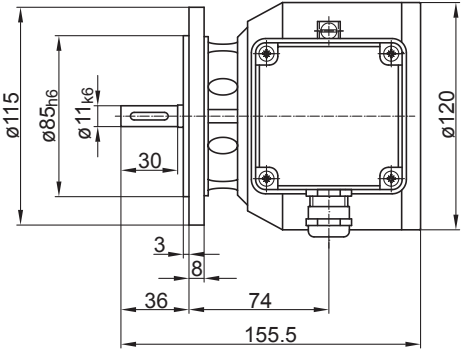
ø115
ø85h6
ø11k6
30
3
8
36
74
155.5
ø120

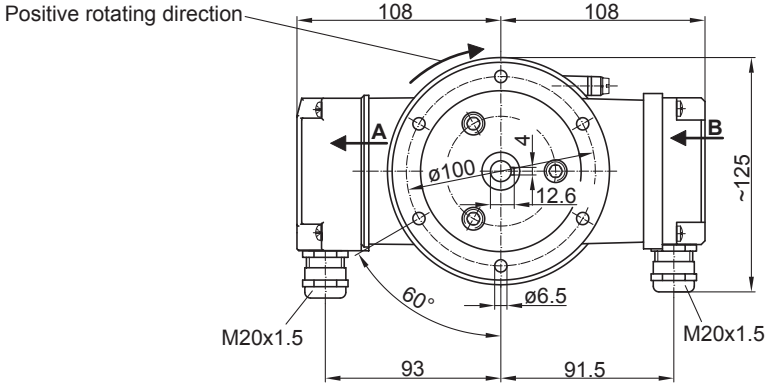
Positive rotating direction
108
108
A
B
4
ø100
12.6
~125
60°
ø6.5
M20x1.5
M20x1.5
93
91.5