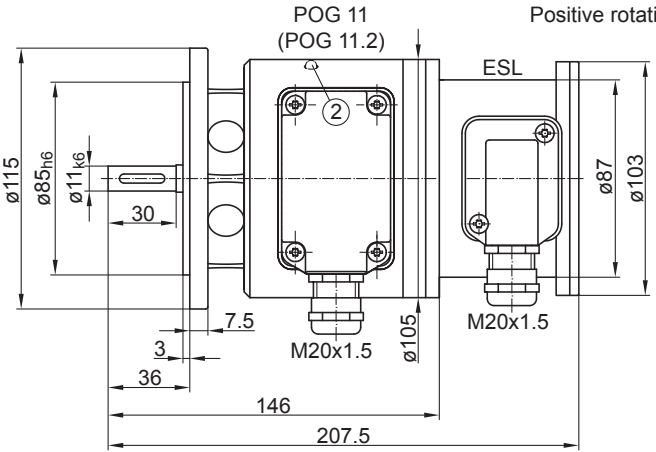

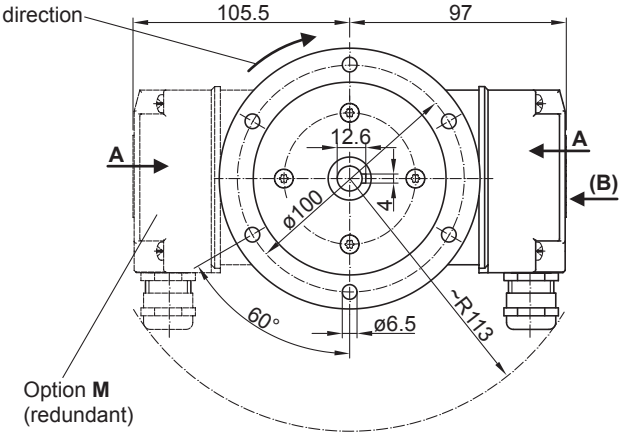

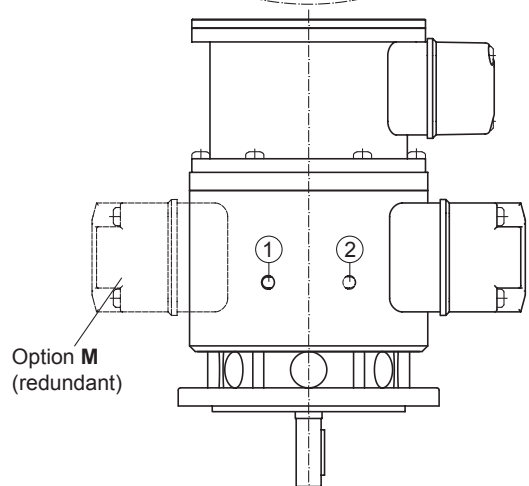

1 Status LED (option EMS)
2 Status LED (option **M** (redundant) and EMS)