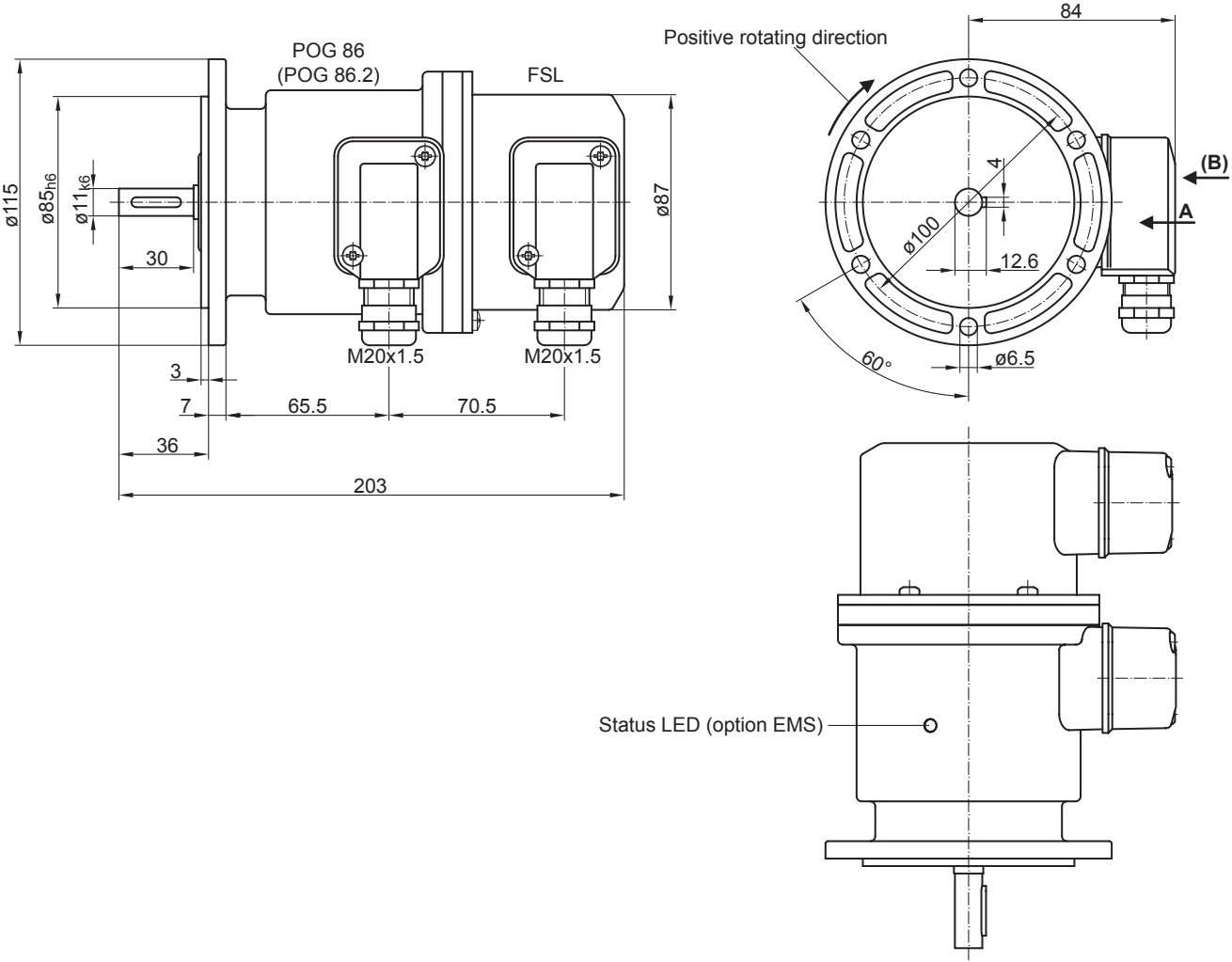
POG 86
(POG 86.2)
FSL
ø115
ø85h6
ø11k6
30
3
7
36
65.5
70.5
203
M20x1.5
M20x1.5
ø87
Positive rotating direction
84
4
ø100
12.6
60°
ø6.5
(B)
A
Status LED (option EMS)