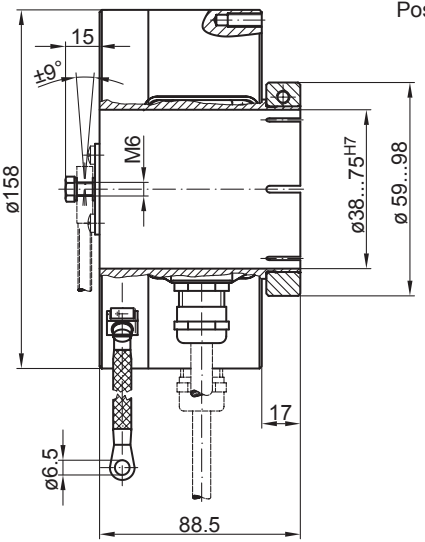
15
±9°
M6
ø158
ø38...75H7
ø 59...98
17
ø6.5
88.5

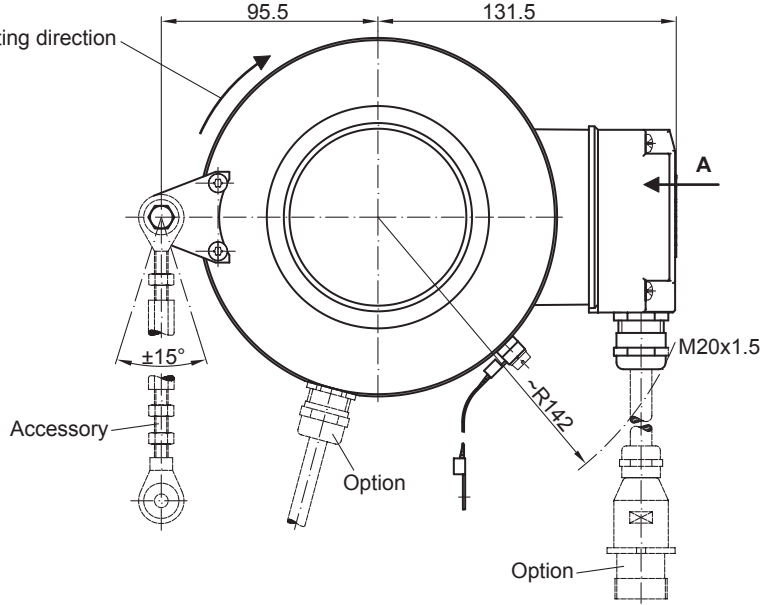
Positive rotating direction
95.5
131.5
A
M20x1.5
±15°
~R142
Accessory
Option
Option