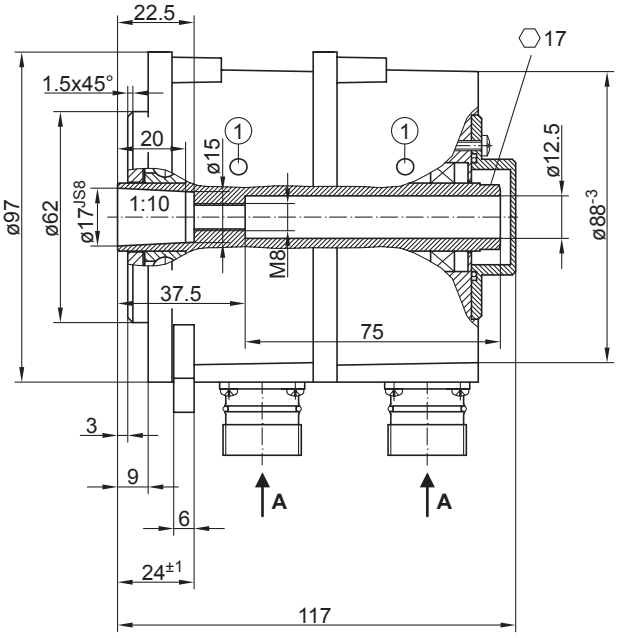

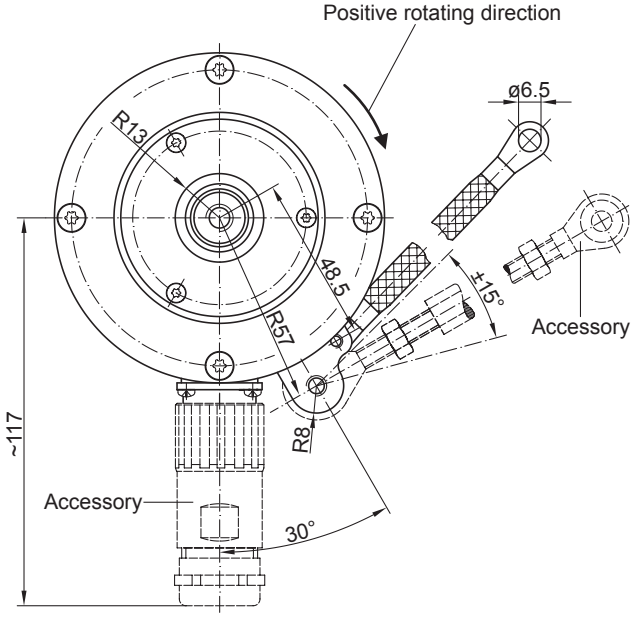

1 Status LED (option EMS)