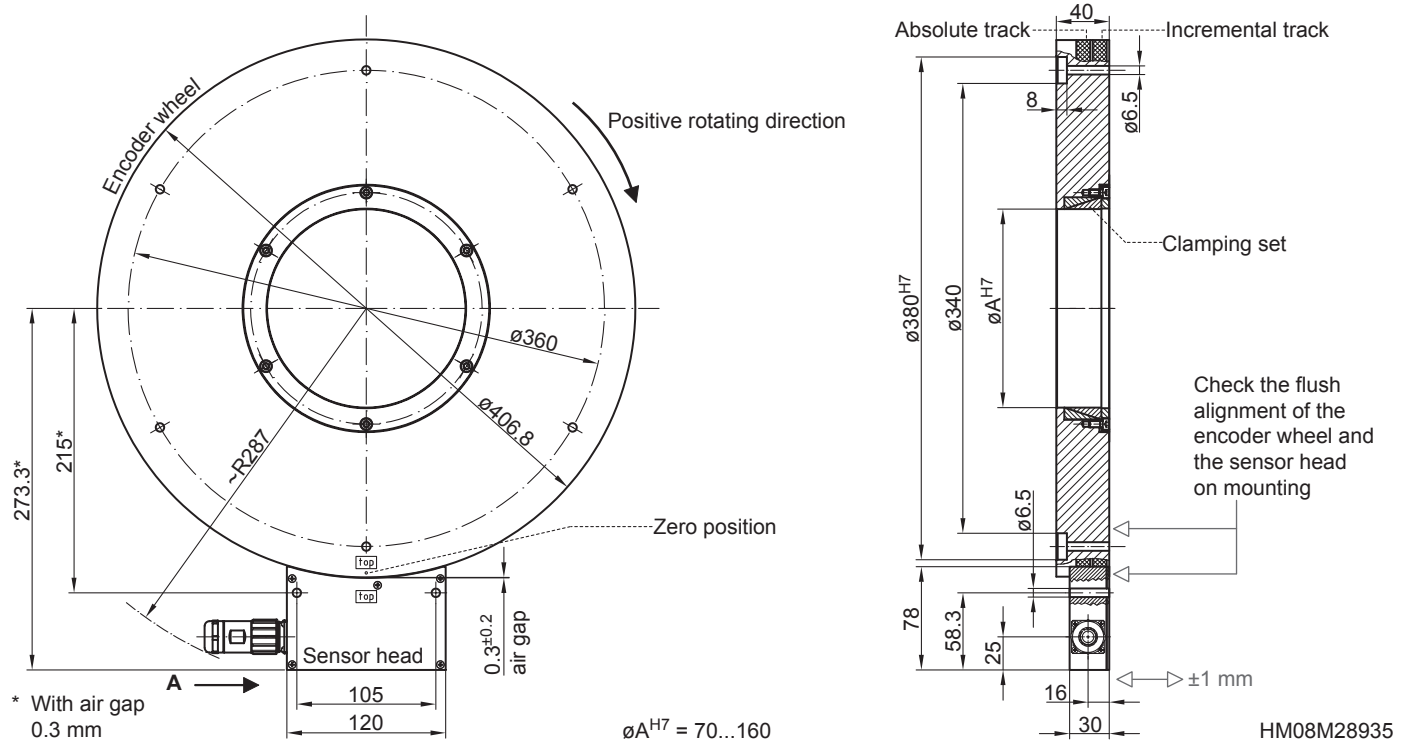
Encoder wheel
Positive rotating direction
ø360
ø406.8
~R287
273.3*
215*
Zero position
top
top
Sensor head
A
105
120
0.3±0.2
air gap
* With air gap
0.3 mm
øA H7 = 70...160
40
Absolute track
Incremental track
8
ø6.5
Clamping set
ø380 H7
ø340
øA H7
Check the flush
alignment of the
encoder wheel and
the sensor head
on mounting
ø6.5
78
58.3
25
16
30
±1 mm
HM08M28935