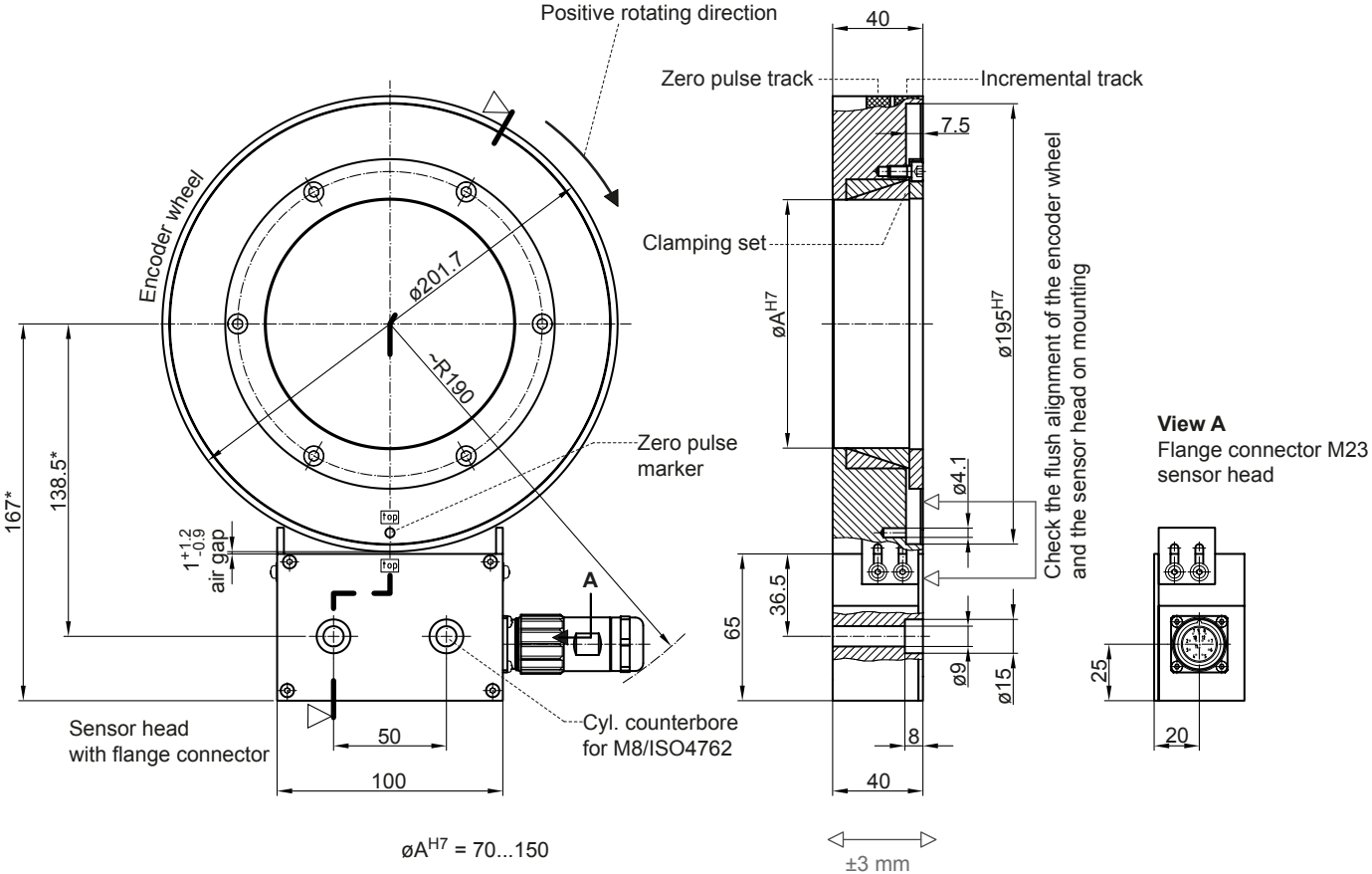

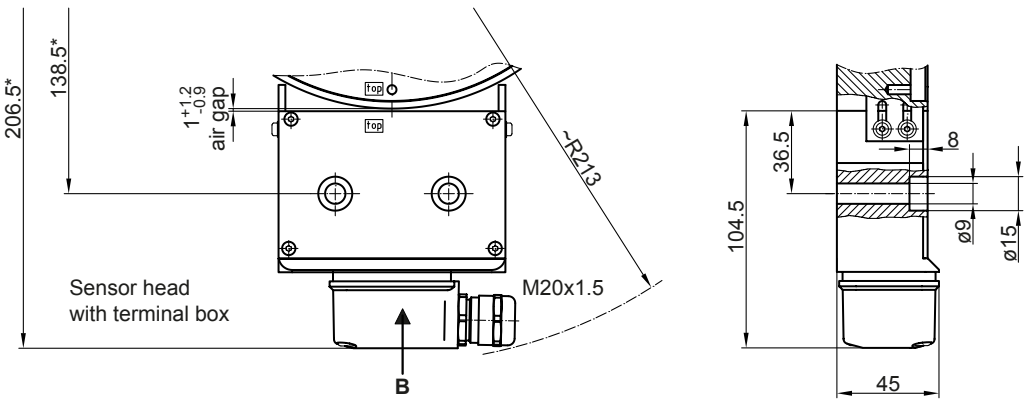

* With air gap 1 mm