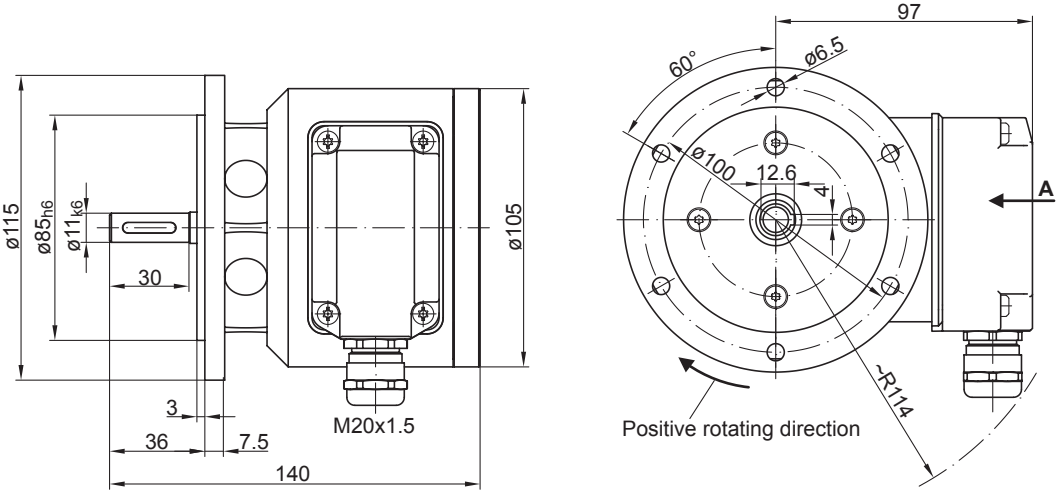
ø115
ø85h6
ø11k6
30
3
36
7.5
140
M20x1.5
ø105
97
60°
ø6.5
ø100
12.6
4
A
~R114
Positive rotating direction