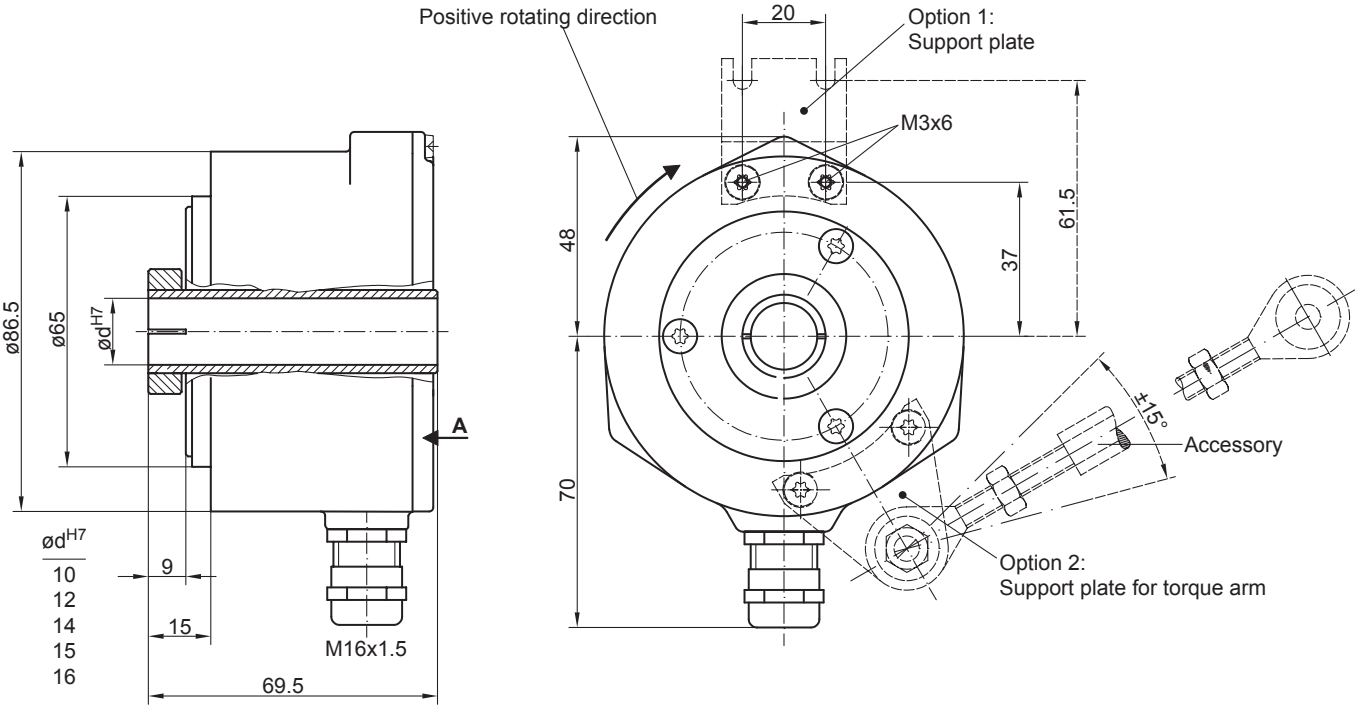
Positive rotating direction
20
Option 1:
Support plate
M3x6
48
37
61.5
70
ø86.5
ø65
ød H7
A
ød H7
10
12
14
15
16
9
15
M16x1.5
69.5
±15°
Accessory
Option 2:
Support plate for torque arm