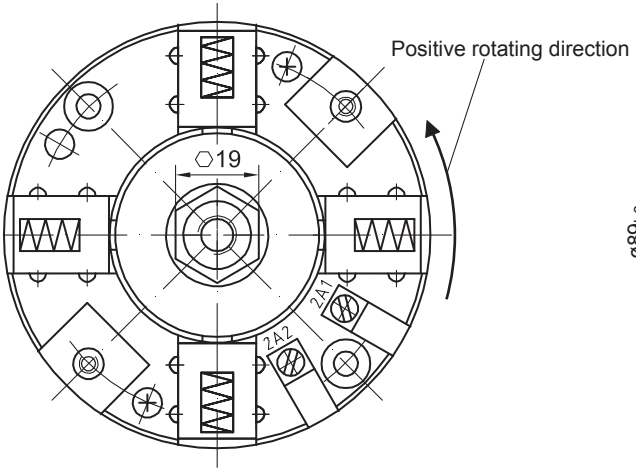

View without cover

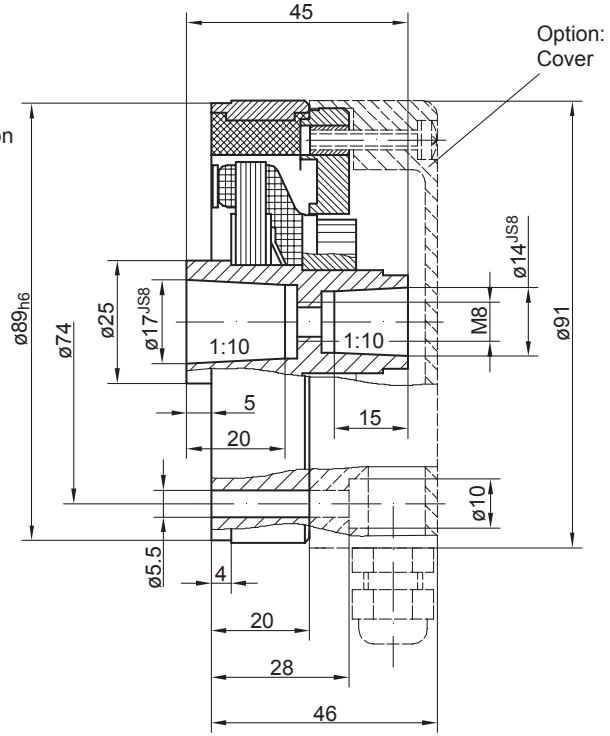

HM82M19117