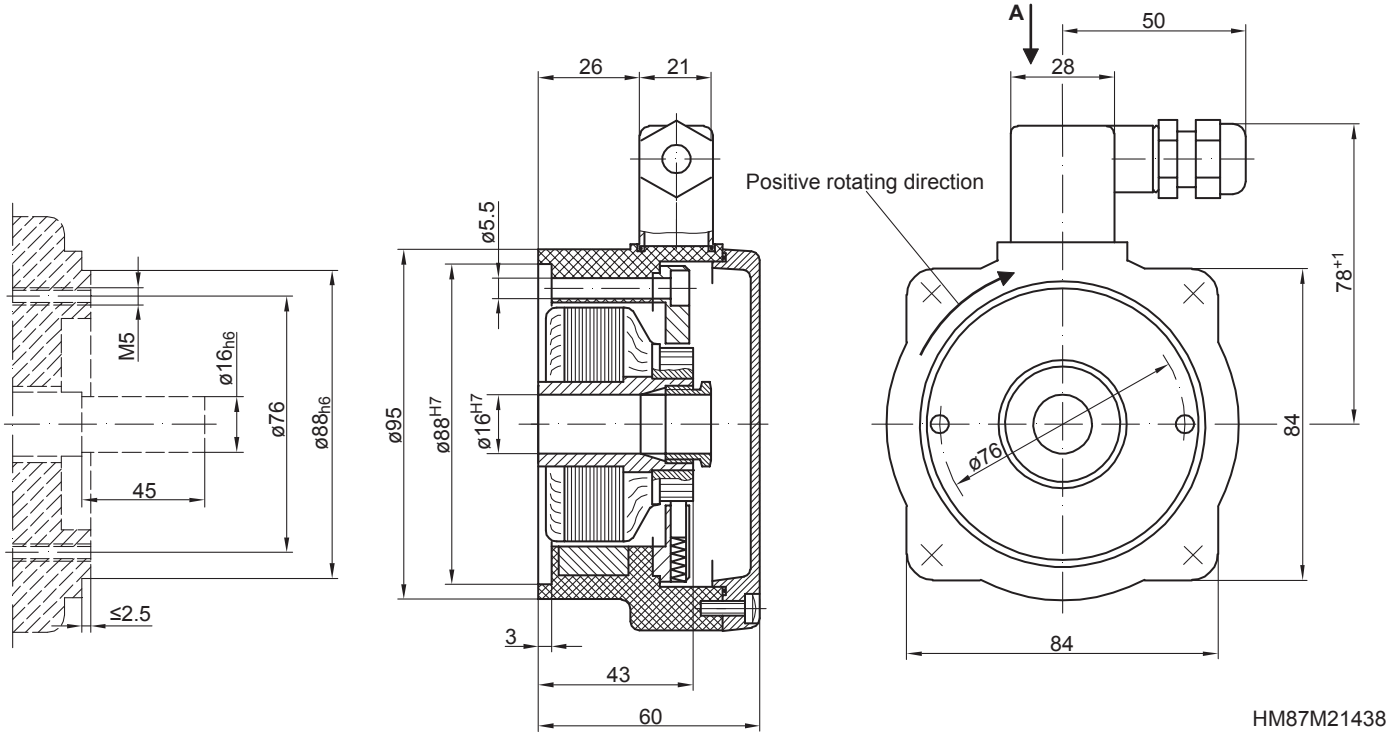
A
50
28
26
21
Positive rotating direction
ø5.5
M5
ø16h6
ø76
ø88h6
45
≤2.5
ø95
ø88H7
ø16H7
3
43
60
78+1
84
ø76
84
HM87M21438