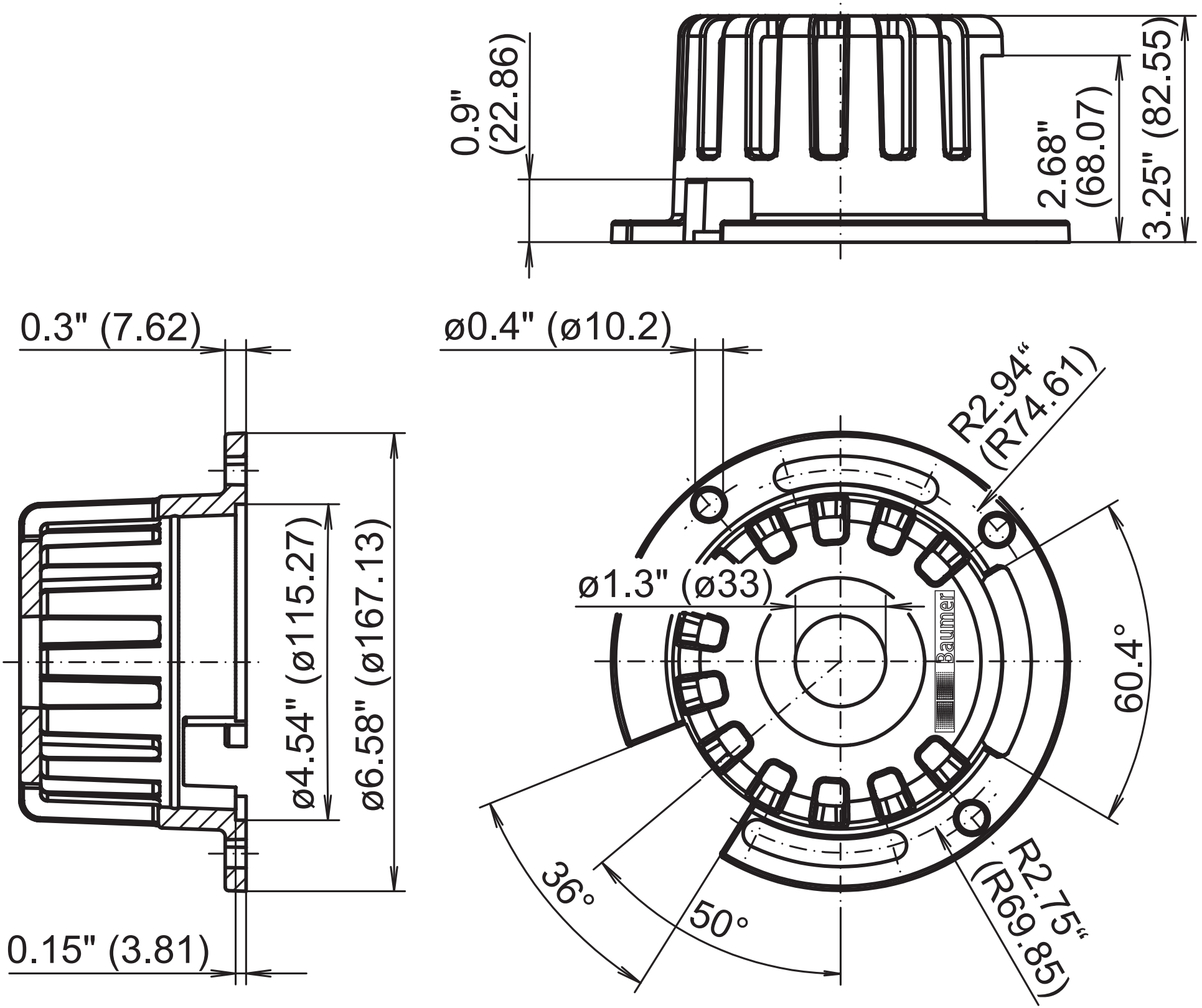
0.9"
(22.86)
2.68"
(68.07)
3.25" (82.55)
0.3" (7.62)
ø0.4" (ø10.2)
R2.94"
(R74.61)
ø1.3" (ø33)
Baumer
60.4°
ø4.54" (ø115.27)
ø6.58" (ø167.13)
36°
50°
R2.75"
(R69.85)
0.15" (3.81)