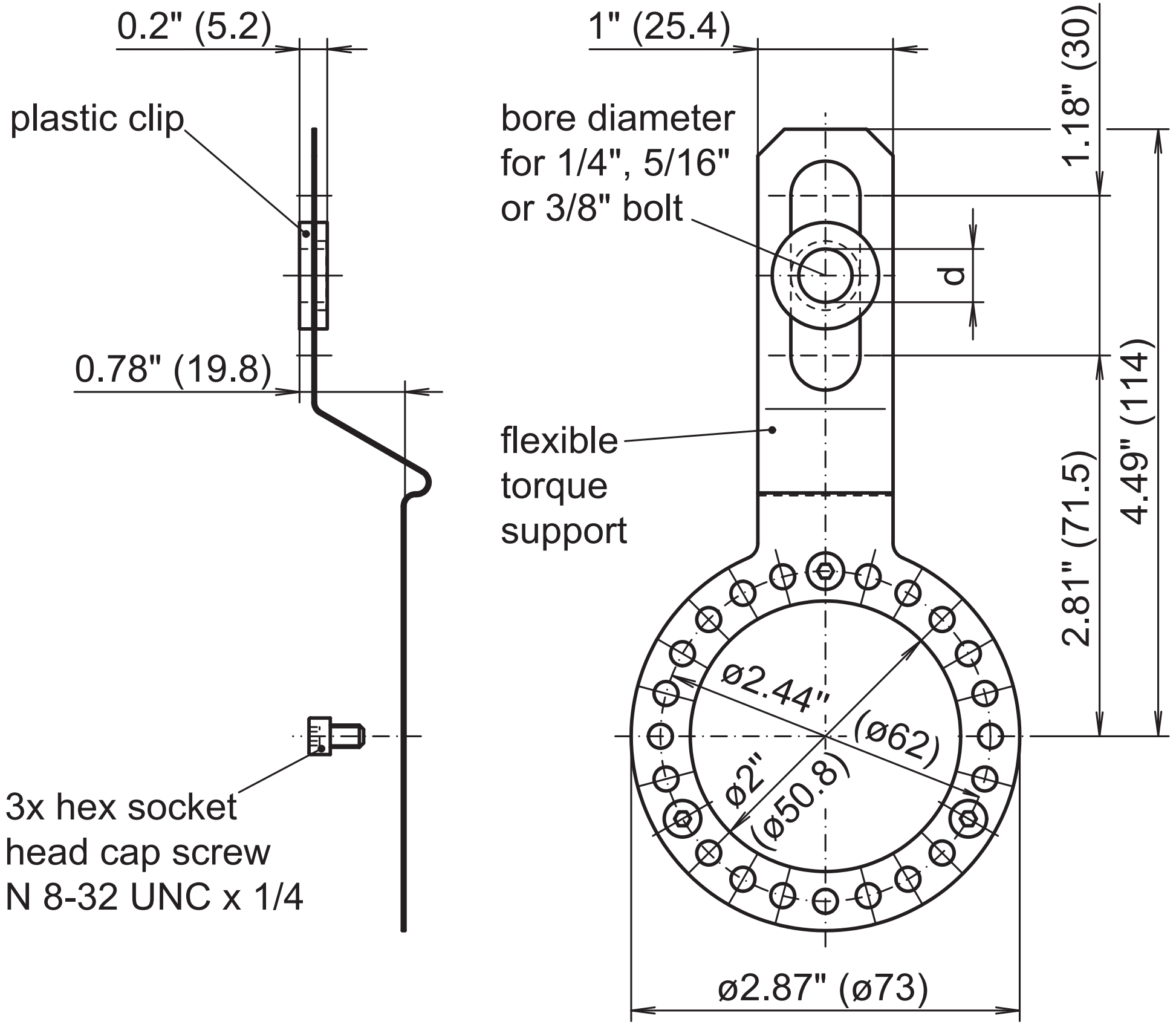
0.2" (5.2)
plastic clip
0.78" (19.8)
3x hex socket
head cap screw
N 8-32 UNC x 1/4
1" (25.4)
bore diameter
for 1/4", 5/16"
or 3/8" bolt
d
flexible
torque
support
1.18" (30)
4.49" (114)
2.81" (71.5)
ø2.44"
(ø62)
ø2"
(ø50.8)
ø2.87" (ø73)