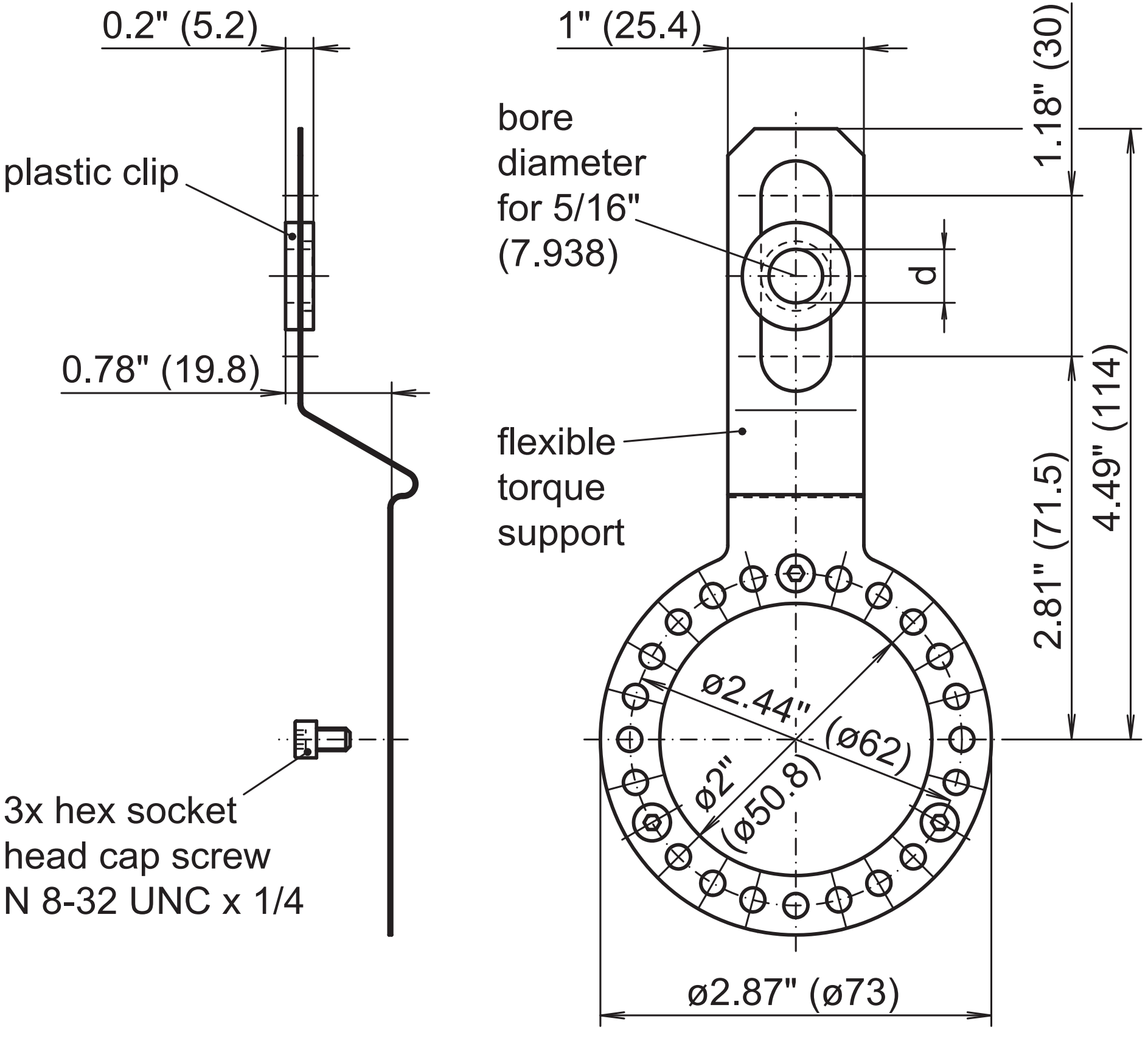
0.2" (5.2)
1" (25.4)
1.18" (30)
plastic clip
bore
diameter
for 5/16"
(7.938)
d
0.78" (19.8)
flexible
torque
support
2.81" (71.5)
4.49" (114)
ø2.44"
(ø62)
ø2"
(ø50.8)
3x hex socket
head cap screw
N 8-32 UNC x 1/4
ø2.87" (ø73)