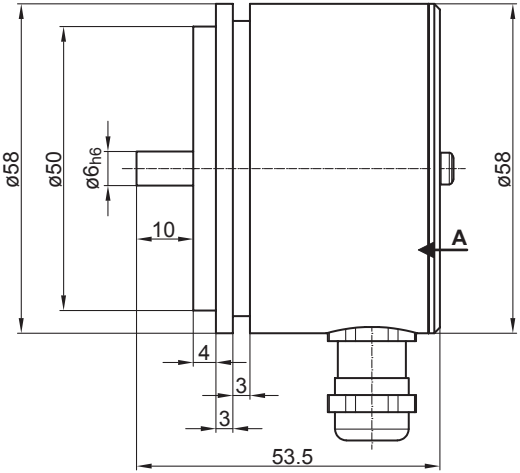
ø58
ø50
ø6h6
10
A
ø58
4
3
3
53.5

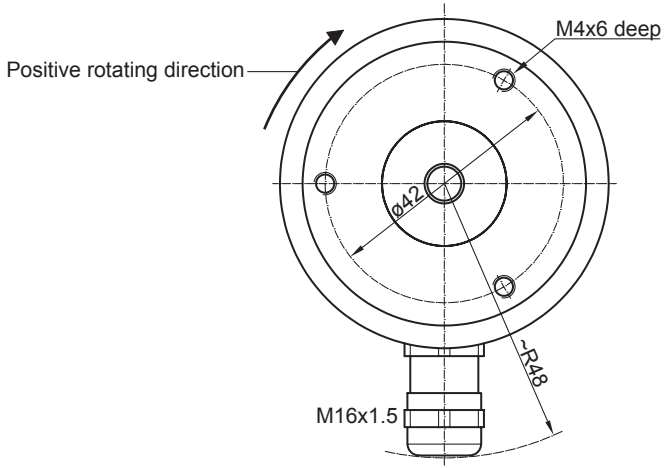
Positive rotating direction
M4x6 deep
ø42
~R48
M16x1.5