Industrial cameras / CX series

VCXG-25M

Gigabit Ethernet, 2,3 Megapixel, Monochrome

Article number: 11165829

Overview

- 1920 x 1200 px
- onsemi PYTHON2000
- 2/3" CMOS
- 53 fps
- Gigabit Ethernet
- Availability on request

Technical data

Sensor information	
Sensor	onsemi PYTHON2000
Mono/Color	Mono
Sensor type	2/3″ CMOS
Shutter type	Global shutter
Resolution	1920 × 1200 px
Pixel size	4.8 × 4.8 µm
Exposure time	0.02 … 1000 ms
Acquisition formats	
Image formats, interface frame rate max.	Full Frame, 1920 × 1200 px, max. 53 fps Binning 2×2, 960 × 600 px, max. 59 fps Binning 2×1, 960 × 1200 px, max. 59 fps Binning 1×2, 1920 × 600 px, max. 59 fps
Image formats, aquisition frame rate max. (Burst Mode)	Full Frame, 1920 × 1200 px, max. 59 fps
Pixel formats	Mono8 Mono10
Image preprocessing	
Analog controls	Gain (0 … 12 dB) Offset (0 … 63 LSB 10 Bit)
Color models	Mono

Camera features	
Basic Functions	Exposure Gain Trigger / Exposure Active (Flash) Binning 2x2 Partial Scan Offset Free Running Mode (Live Image)
Auto Functions	Exposure Auto Gain Auto
Image Pre-processing	Image Flipping (X/Y) LUT / Gamma
Acquisition / Interface	Burst Mode Adjustable Framerate Device Link Throughput Limit Internal Image Buffer
Synchronization	free running trigger
Trigger sources	Hardware Software ActionCommand
Trigger delay	0 … 2 sec, tracking and buffering of up to 256 trigger signals

2021-12-13 The product features and technical data specified do not express or imply any warranty. Technical modifications subject to change.

VCXG-25M

Gigabit Ethernet, 2,3 Megapixel, Monochrome

Article number: 11165829

Technical data

Camera features	
Process Synchronization	Events Timer Trigger Delay Debouncer Counter Sequencer Trigger via Action CMD (GigE) Additional Output Modes (e.g. Trigger Ready) Chunk data inside transferred image Encoder support via Counter End trigger source
Additional Functions	User Set Integrated temperature sensor Readable additional information (e.g. sensor information) Save Custom Data
Internal image buffer	53 MB 8 images (Trigger Mode) 1 image (Free Running Mode)
Interfaces and connectors	
Data interface	Gigabit Ethernet, Transfer rate 1000 Mbits/sec, Fast Ethernet, Transfer Rate 100 Mbits/sec, Connector: 8P8C Modular Jack (RJ45), screwable type
Process interface	M8 / 8 pins (SACC-DSI-M8MS-8CON-M8-L180)
Power supply	via M8 / 8 pins or Power over Ethernet (PoE)
Mechanical data	
Lens mount	C-mount

Dimension drawing

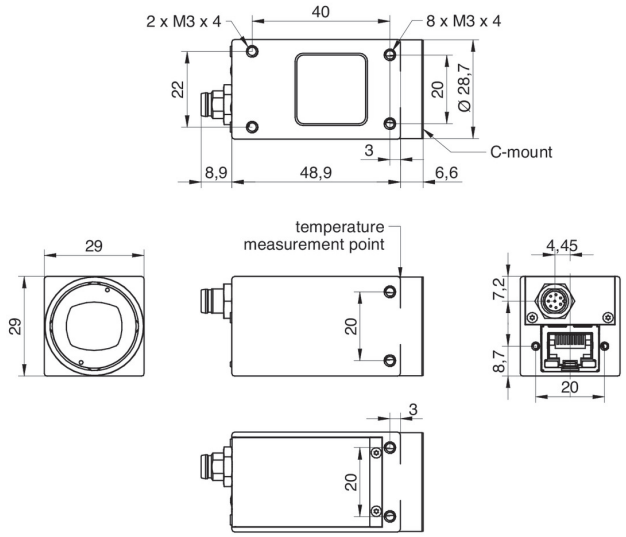

Mechanical data	
Width	29 mm
Height	29 mm
Depth	49 mm
Weight	≤ 120 g
Material	zinc die casting, baked varnish (until 02-2020 nickel-chrome-plated), IP 40
Electrical data	
Voltage supply range +Vs	12 … 24 V DC (external power supply) 36 … 57 V DC (Power over Ethernet)
Power consumption	approx. 2,9 W @ 12 VDC and 53 fps approx. 3,5 W @ 48 VDC (PoE) and 53 fps
Non-volatile memory	
Flash memory size	128 kB
Environmental conditions	
Operating temperature	0 … +65 ° @ T = measurement point
Humidity	10 … 90 % (non-condensing)
Protection class	IP 40
Digital I/Os	
Lines	1 input line 1 output line 2 general purpose lines
Conformity	
Conformity	CE RoHS KC (MISP-REI-BkR-VCXG-53M) EAC BIS-CRS (R-41207004)

2021-12-13 The product features and technical data specified do not express or imply any warranty. Technical modifications subject to change.