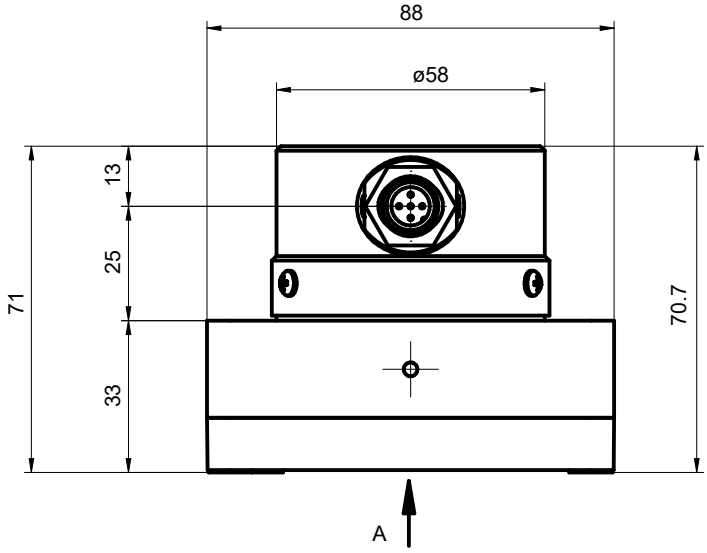
88
ø58
13
25
33
71
70.7
A

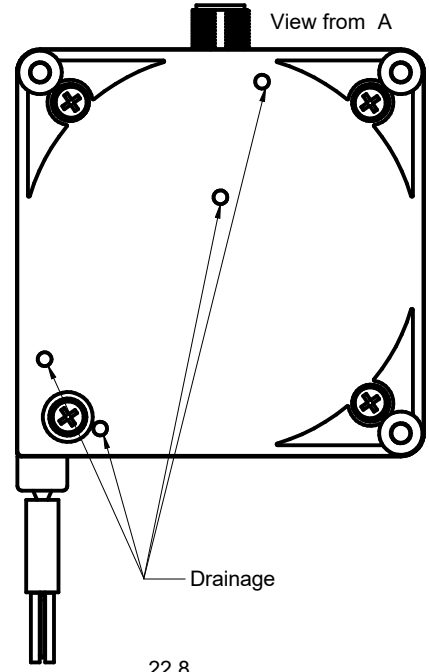
View from A
Drainage

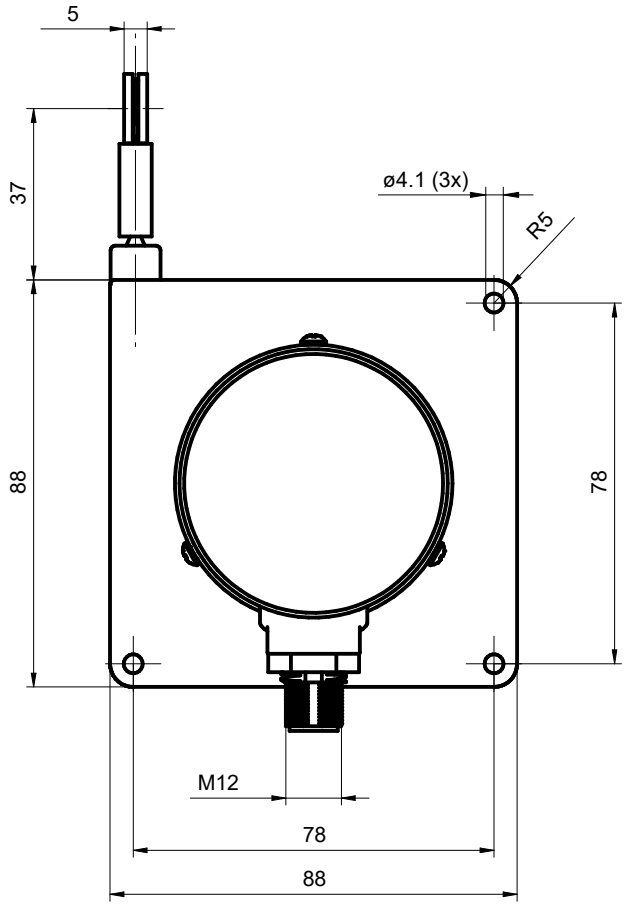
5
37
ø4.1 (3x)
R5
88
78
M12
78
88

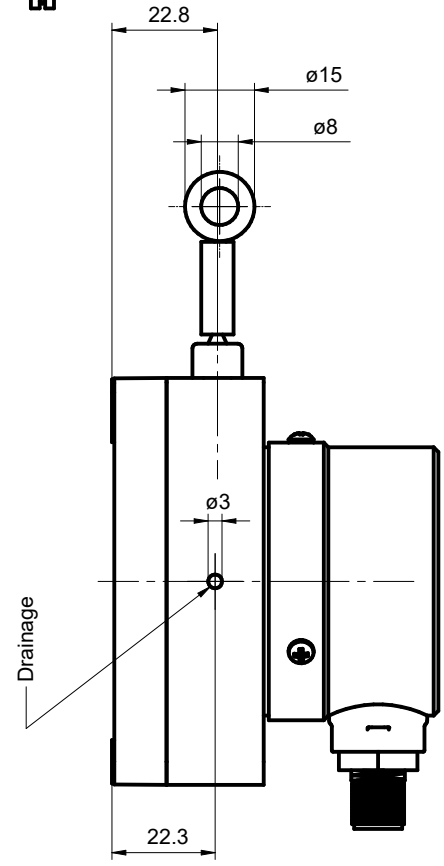
22.8
ø15
ø8
ø3
Drainage
22.3