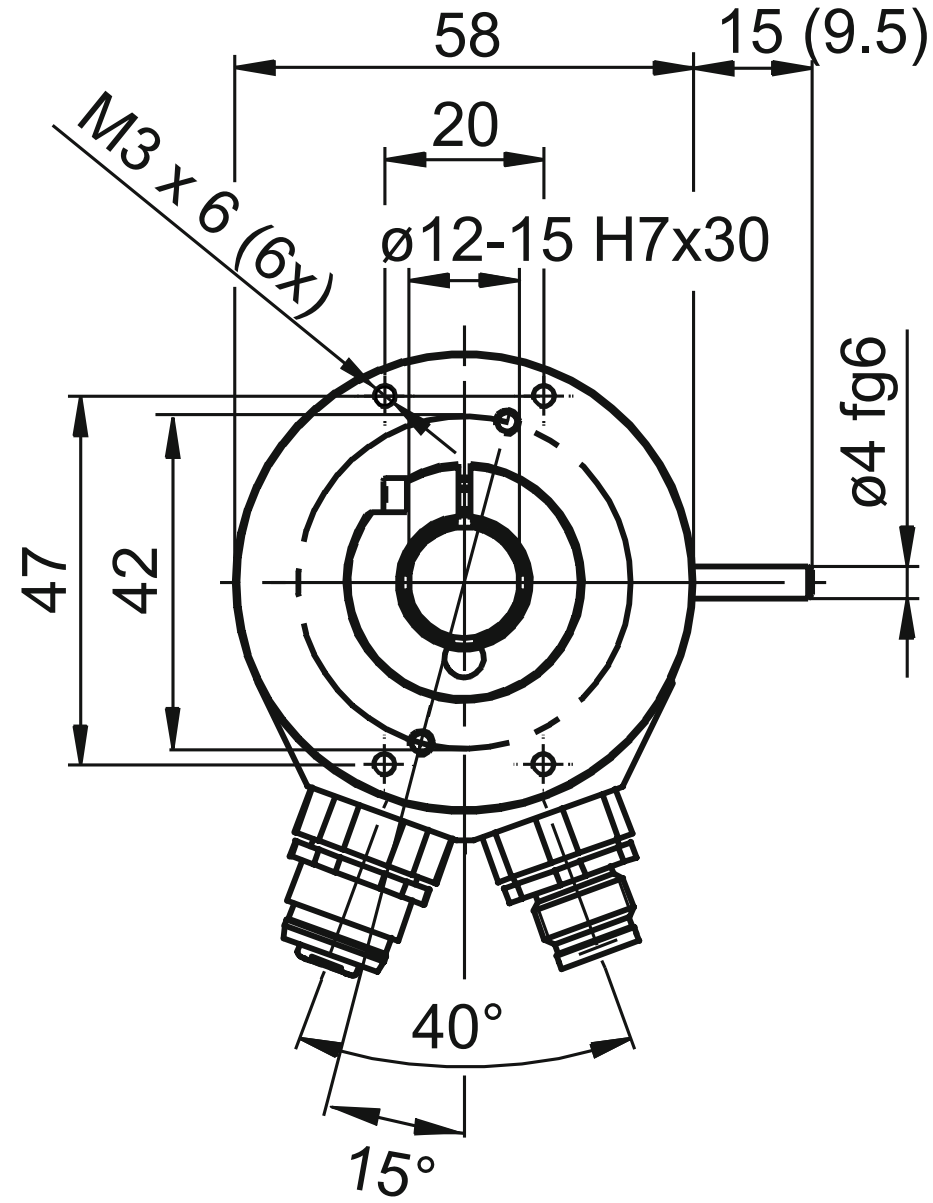
58
15 (9.5)
20
M3 x 6 (6x)
ø12-15 H7x30
ø4 fg6
47
42
40°
15°

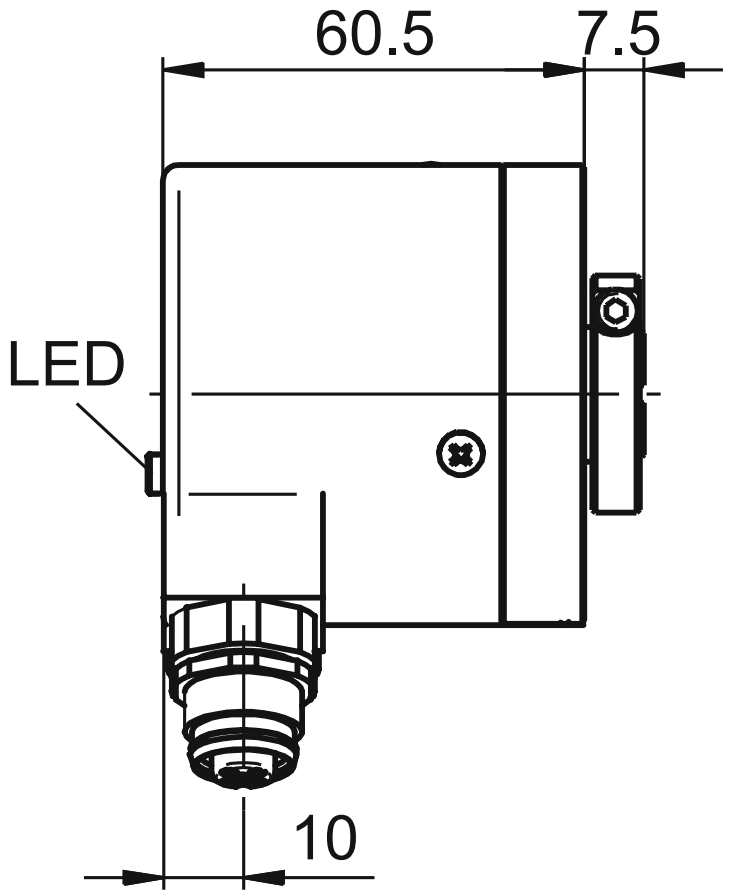
60.5
7.5
LED
10

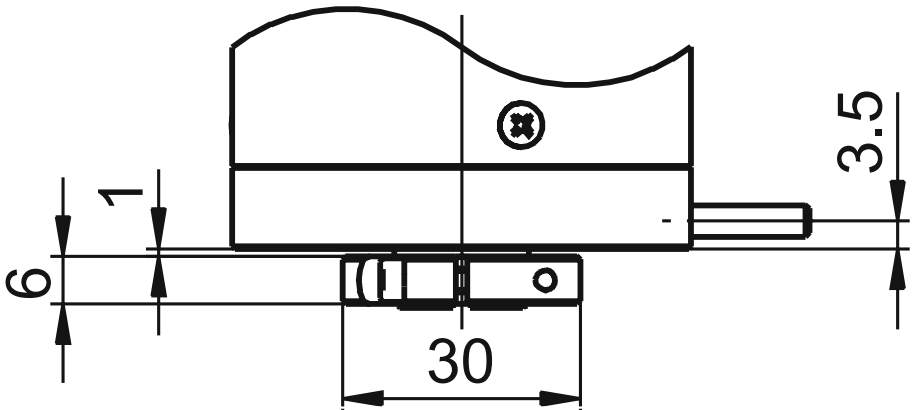
3.5
1
6
30