Absolute encoders

GXAMW

Solid shaft with clamping or synchro flange

Optical singleturn encoders 13 bit

Overview

- Encoder singleturn / bus cover
- Optical sensing method
- Resolution: 13 bit
- Clamping or synchro flange
- CANopen®, EtherCAT, EtherNet/IP, SAEJ1939, PROFINET, Profibus, SSI
- Code continuity check optional by bus
- Maximum resistant against magnetic fields

Technical data

Technical data - electrical ratings	
Voltage supply	10...30 VDC
Reverse polarity protection	Yes
Consumption w/o load	≤100 mA (24 VDC)
Initializing time typ.	250 ms after power on
Interface	CANopen® EtherCAT EtherNet/IP Profibus PROFINET SAE J1939 SSI
Function	Singleturn
Device adress	Rotary switch in bus cover (type-specific)
Steps per revolution	≤8192 / 13 bit
Absolute accuracy	±0.025 °
Sensing method	Optical
Code	Binary
Code sequence	CW/CCW programmable
Incremental output	2048 pulses A90°B (optional)
Interference immunity	EN 61000-6-2
Emitted interference	EN 61000-6-4
Programmable parameters	Steps per revolution Preset Scaling Rotating direction
Diagnostic function	Position or parameter error
Status indicator	DUO-LED integrated in bus cover

Technical data - electrical ratings	
Approval	UL approval / E63076
Technical data - mechanical design	
Size (flange)	ø58 mm
Shaft type	ø10 mm solid shaft (clamping flange) ø6 mm solid shaft (synchro flange)
Flange	Clamping or synchro flange
Protection EN 60529	IP 54 (without shaft seal) IP 65 (with shaft seal)
Operating speed	≤10000 rpm (mechanical) ≤6000 rpm (electric)
Starting acceleration	≤1000 U/s²
Starting torque	≤0.015 Nm (+25 °C, IP 54) ≤0.03 Nm (+25 °C, IP 65)
Rotor moment of inertia	20 gcm²
Admitted shaft load	≤20 N axial ≤40 N radial
Material	Housing: steel Flange: aluminium Bus cover: zinc die-cast
Operating temperature	-25...+85 °C -40...+85 °C (optional)
Relative humidity	95 % non-condensing
Resistance	EN 60068-2-6 Vibration 10 g, 16-2000 Hz EN 60068-2-27 Shock 200 g, 6 ms
Weight approx.	650 g
Connection	Bus cover

Optional

- Incremental outputs and stainless steel design

2023-11-22 The product features and technical data specified do not express or imply any warranty. Technical modifications subject to change.

GXAMW

Solid shaft with clamping or synchro flange

Optical singleturn encoders 13 bit

Dimensions

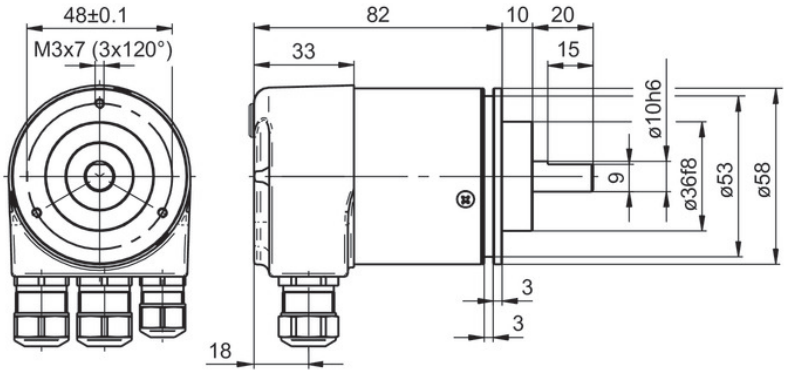

With clamping flange

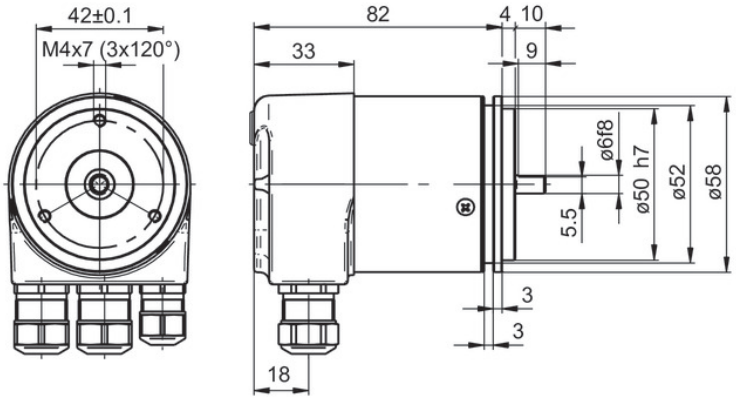

With synchro flange

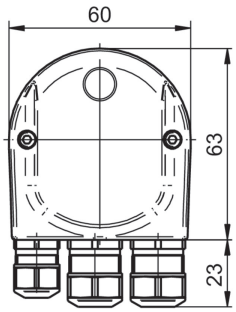

Profibus-DP

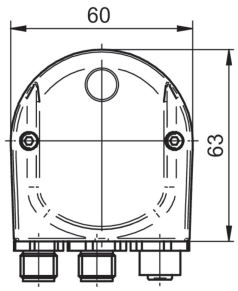

Profibus-DP - M12

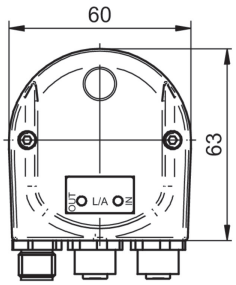

EtherCAT/EtherNet-IP

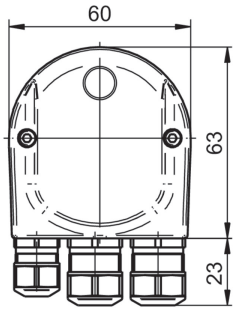

SAEJ1939

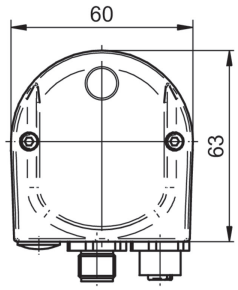

SAEJ1939 - M12

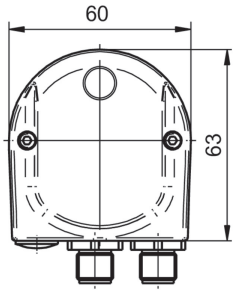

SSI

The product features and technical data specified do not express or imply any warranty. Technical modifications subject to change.
2023-11-22

GXAMW

Solid shaft with clamping or synchro flange

Optical singleturn encoders 13 bit

Ordering reference

	GXAMW	.	#	20	####
Product					
	GXAMW				
Flange / Solid shaft					
Clamping flange / ø10 mm, IP 54			0		
Clamping flange / ø10 mm, IP 65			A		
Synchro flange / ø6 mm, IP 54			1		
Synchro flange / ø6 mm, IP 65			B		
Voltage supply					
10...30 VDC				20	
Interface					
Profibus-DPV0 / cable gland					3P32
Profibus-DPV0 / connector M12					3PA2
Profibus-DPV2 / cable gland					3V32
Profibus-DPV2 / connector M12					3VA2
PROFINET / connector M12					3EA2
EtherCAT / connector M12					EPA6
EtherNet/IP / connector M12					8EA2
CANopen® / cable gland					5P32
CANopen® / connector M12					5PA2
SSI / connector M12					2PA2
SAEJ1939 / cable gland					5B32
SAEJ1939 / connector M12					5BA2

Accessories

Mounting accessories	
10117669	Eccentric fixing, single (Z 119.006)
10141255	Adaptor plate for clamping flange for modification into synchro flange (Z 119.013)
10117667	Mounting adaptor
10117668	Set of eccentric fixings for mounting clamp (10117667)
10125051	Mounting adaptor
10158124	Bearing flange for encoders with synchro flange (Z 119.035)
10141132	Spring washer coupling (D1=6 / D2=10)
Programming accessories	
11034193	Programming cable for encoders with SSI bus cover, CD with software and manual (Z 139.008)

2023-11-22 The product features and technical data specified do not express or imply any warranty. Technical modifications subject to change.