Baumer
Passion for Sensors

Connection cable

CAM12.A4-11232943

Article Number: 11232943

Overview

- M12, male, A-coded, 4-poles; PUR, 1500 cm; M12, female, A-coded, 4-poles
- Dragchain capable; suitable for robotics ± 180 °/m
- Head A: IP65, IP66K, IP67; Head B: IP65, IP66K, IP67
- Cable: good resistance against chemicals, flames, oils
- Halogen free

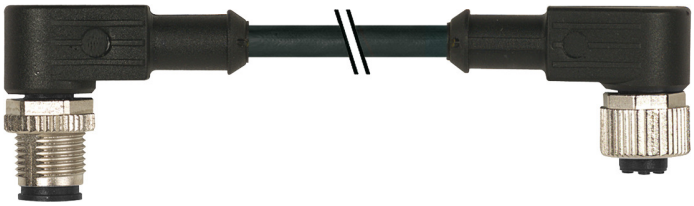

c UL us LISTED
CYJV Cable Assembly
47YV
E315836

Technical data

Side A	
Head A: Connection	M12
Head A: Angle cable outlet	90°
Head A: Gender	Male
Head A: Coding	A
Head A: No. of poles	4
Head A: LED	No
Head A: Width across flats	AF13
Head A: Tightening torque	0.6 Nm
Head A: Knurled nut material	Zinc-pressure die casting, surface Ni
Head A: Body color	Black
Labeling sleeve side A	Yes
Side B	
Head B: Connection	M12
Head B: Angle cable outlet	90°
Head B: Gender	Female
Head B: Coding	A
Head B: No. of poles	4
Head B: LED	No
Head B: Width across flats	AF13
Head B: Tightening torque	0.6 Nm
Head B: Knurled nut material	Zinc-pressure die casting, surface Ni
Head B: Body color	Black
Labeling sleeve side B	Yes
Cables	
Cable length	1500 cm
Length tolerance	± 22.5 cm
Shielded	No
Conductor structure	42 × 0.1 mm
AWG	22
External sheath: Material	PUR
External sheath: Color	Black
Cable diameter	4.5 mm ± 5%
Wire cross section	0.34 mm²
Electrical data	
Operating voltage	max. 250 V AC/DC
Operating voltage (only UL listed)	30 V AC/DC

Electrical data	
Nominal voltage	300 V
Contact resistance	max. 30 mOhm
Operating current per contact	max. 4 A
Mechanical data	
Head A: Degree of protection	IP65, IP66K, IP67
Head B: Degree of protection	IP65, IP66K, IP67
Bending radius (mobile)	min. 10 × outer diameter
Bending radius (fixed)	min. 5 × outer diameter
No. of bending cycles (C-track)	approx. 10000000 Cycles
Torsion speed	max. 35 cycles/min
Torsion stress in °	± 180 °/m
No. of torsion cycles	approx. 2000000 Cycles
Acceleration (C-track)	max. 10 m/s²
Travel speed (C-track)	max. 3 m/s
Environmental conditions	
Temperature range (mobile)	- 25 ...+ 80 °C
Temperature range (fixed)	- 25 ...+ 80 °C
Cable: Temperature range (fixed)	- 40 ...+ 80 °C
Dragchain capable	Yes
Head A: Chemical resistance	No
Head A: Flame resistance	HB (UL 94)
Head A: Oil resistance	ASTM 1 oil, mineral oils, limited to hydraulic oils
Head A: Acid and alkali resistant	No
Head A: Pollution degree	3
Head B: Chemical resistance	No
Head B: Flame restistance	HB (UL 94)
Head B: Oil resistance	ASTM 1 oil, mineral oils, limited to hydraulic oils
Head B: Acid and alkali resistant	No
Head B: Pollution degree	3

2022-11-09 The product features and technical data specified do not express or imply any warranty. Technical modifications subject to change.

Connection cable

CAM12.A4-11232943

Article Number: 11232943

Technical data

Environmental conditions	
Cable: Chemical resistance	Good (DIN EN 60811-404)
Cable: Flame resistance	Conform UL 1581 §1090 (H), CSA FT2, IEC 60332-2-2
Cable: Oil resistance	Good (DIN EN 60811-404)

Environmental conditions	
Cable: Silicone-free	Yes

Commercial data	
Eclass	27060311

Side A

Technical drawing

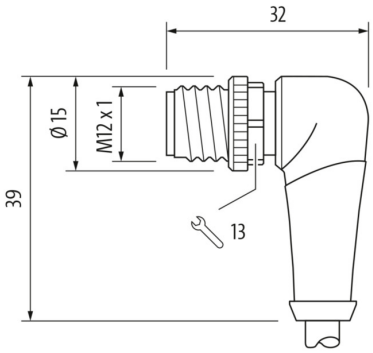

Coding

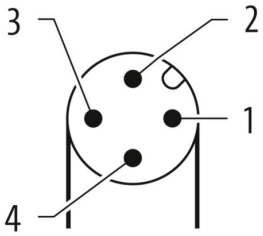

Side B

Technical drawing

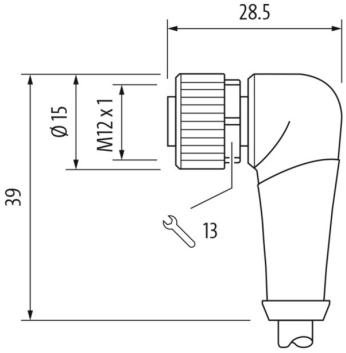

Coding

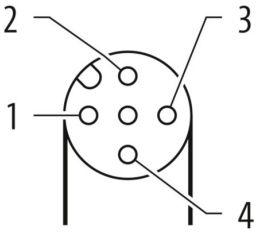

2022-11-09 The product features and technical data specified do not express or imply any warranty. Technical modifications subject to change.

Connection cable

CAM12.A4-11232943

Article Number: 11232943

Connection diagram

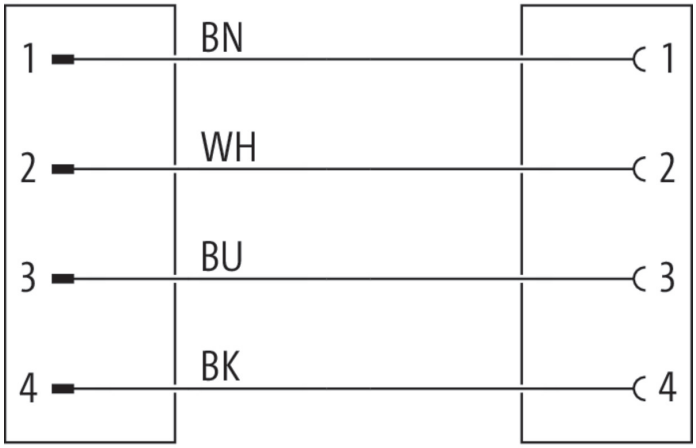

Dimension drawing

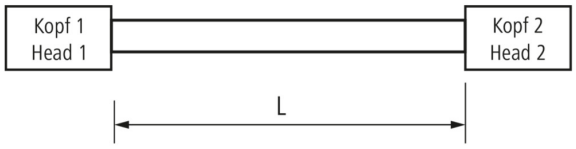

2022-11-09 The product features and technical data specified do not express or imply any warranty. Technical modifications subject to change.