Baumer
Passion for Sensors

Capacitive proximity sensors

CFDK 25G1125/KS35LN4

Capacitive proximity sensors

Article number: 11076813

Overview

- 8 mm
- push-pull
- no
- flylead connector M8, L=200 mm
- -25 … 75 °C
- IP 65

Picture similar

Technical data

General data	
Nominal sensing distance Sn	8 mm
Mounting type	Flush
GND electrode	No
Temperature drift	± 20 %
Sensitivity adjustment	No
Output indicator	LED red
Measurement type	Contactless
Field of application	
Detection of non-conductive media	Yes
Fill level detection through container	Yes
Liquids in direct contact	No
Object detection / bulk goods	Yes
Electrical data	
Voltage supply range +Vs	10 … 30 VDC
Current consumption max. (no load)	15 mA

Electrical data	
Output function	Active high
Output circuit	Push-pull
Output current	< 100 mA
Voltage drop Vd	< 3 VDC
Switching frequency	35 Hz
Short circuit protection	Yes
Reverse polarity protection	Yes
Mechanical data	
Type	Rectangular
Housing material	PA 12
Dimension	25 mm
Housing length	52.4 mm
Depth	6 mm
Connection types	Flylead connector M8, L=200 mm
Ambient conditions	
Operating temperature	-25 … +75 °C
Protection class	IP 65

2022-11-09 The product features and technical data specified do not express or imply any warranty. Technical modifications subject to change.

CFDK 25G1125/KS35LN4

Capacitive proximity sensors

Article number: 11076813

Dimension drawing

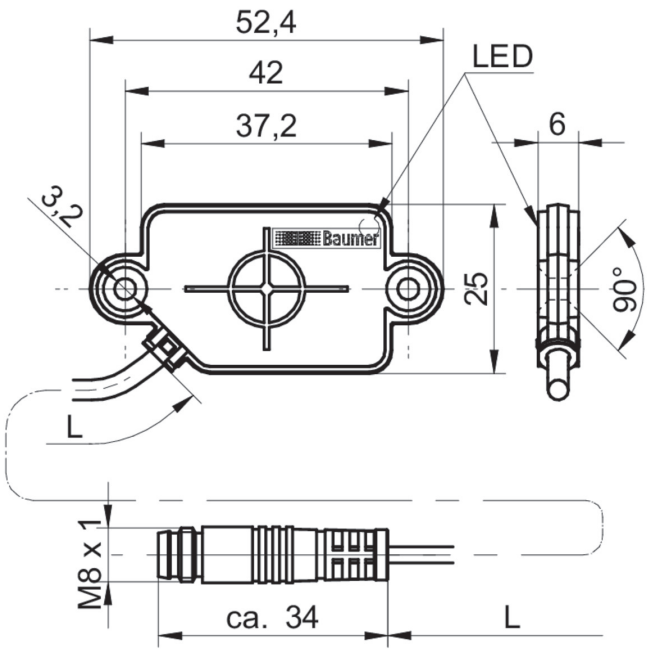

Connection diagram

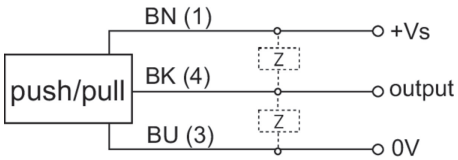

2022-11-09 The product features and technical data specified do not express or imply any warranty. Technical modifications subject to change.