EAM360-K - CANopen®

Encoder kit

Magnetic single- or multiturn encoders 14 bit ST / 18 bit MT

Overview

- Encoder kit single- or multiturn / CANopen®
- Precise magnetic sensing
- Angular accuracy up to ±0.15°
- Additional incremental signals
- High protection up to IP 67
- High resistance to shock and vibrations
- Electronic gear function

Technical data

Technical data - electrical ratings	
Voltage supply	10...30 VDC
Consumption typ.	20 mA (24 VDC, w/o load)
Initializing time	≤ 170 ms after power on
Data currency	<1 ms
Interface	CANopen® CANopen®-Lift CANopen® + incremental
Function	Multiturn Singleturn
Profile conformity	CANopen® CiA communication profile DS 301, LSS profile DSP 305, device profile DS 406, DS 417
Steps per revolution	≤16384 / 14 bit
Number of revolutions	≤262144 / 18 bit
Absolute accuracy	±0.15 ° (+20 ±15 °C) ±0.25 ° (-40...+85 °C) (see info working distance)
Sensing method	Magnetic
Code sequence	CW: ascending values with clockwise sense of rotation; looking at flange
Output stages	CAN-Bus, LV (3.3 V) compatible ISO 11898 Incremental: linedriver RS422 or push-pull (option)
Incremental output	1024, 2048, 4096 ppr (other on request)

Technical data - electrical ratings	
Output signals	A+, A-, B+, B-
Output frequency	≤350 kHz
Interference immunity	EN 61000-6-2
Emitted interference	EN 61000-6-4
Approval	UL approval / E217823
Technical data - mechanical design	
Size (flange)	ø36 mm
Shaft type	ø6 mm (magnet bore) ø8 mm (magnet bore) ø12 mm (magnet bore)
Protection EN 60529	IP 67
Operating speed	≤6000 rpm
Working distance	1.1 ±0.9 mm axial / ≤0.3 mm eccentricity
Material	Housing: steel zinc-coated Flange: aluminium
Operating temperature	-40...+65 °C (see general information)
Relative humidity	95 %
Resistance	EN 60068-2-6 Vibration 30 g, 10-2000 Hz EN 60068-2-27 Shock 500 g, 1 ms
Weight approx.	170 g
Connection	Flange connector M12, 5-pin Flange connector M12, 8-pin Cable 2 m

Optional

- Protection against corrosion CX (C5-M)

2022-08-15 The product features and technical data specified do not express or imply any warranty. Technical modifications subject to change.

EAM360-K - CANopen®

Encoder kit

Magnetic single- or multiturn encoders 14 bit ST / 18 bit MT

General information

Self-heating correlated to installation and ambient conditions as well as to electronics and supply voltage must be considered for precise thermal dimensioning. Operating the encoder close to the maximum limits requires measuring the real prevailing temperature at the encoder flange.

Terminal assignment

Cable
for connection reference **-L**

Core colour	W/o incremental	With incremental
white	0 V	0 V
brown	+Vs	+Vs
green	CAN_H	CAN_H
yellow	CAN_L	CAN_L
grey	CAN_GND	A+
pink	n.c.	A-
blue	n.c.	B+
red	n.c.	B-
Screen: connected to housing		
Cable data: 4 x 2 x 0.14 mm²		

Flange connector M12, 5-pin
for connection reference **-N**

Pin	W/o incremental
1	CAN_GND
2	+Vs
3	0 V
4	CAN_H
5	CAN_L

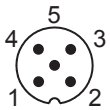

Flange connector M12, 8-pin
for connection reference **-B**

Pin	With incremental
1	0 V
2	+Vs
3	CAN_H
4	CAN_L
5	A+
6	A-
7	B+
8	B-

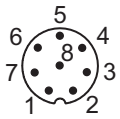

CANopen® features

Operating modes	Timer-driven (Event-Time) Synchronously triggered (Sync)
Node Monitoring	Heartbeat Node guarding
Programmable parameters	Operating modes Total resolution Scaling Electronic gear function
Diagnosis	Multiturn sensing Position error Temperature exceeding Speed exceeding
Default	50 kbit/s, Node ID 1 (DS406) 250 kbit/s, Node ID 4 (DS417)

Output signals

Incremental signals: clockwise rotating direction when looking at flange.

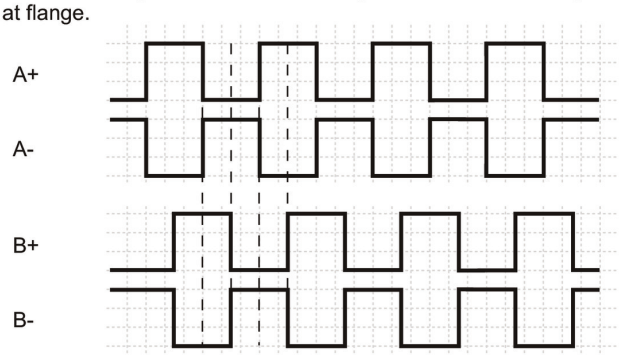

Trigger level

RS422	
Output level High	>2.3 V
Output level Low	<0.5 V
Load	<20 mA

Push-pull	
Output level High	≥+VS -2.2 V
Output level Low	<0.7 V
Load	<20 mA

Applies to standard cable lengths up to 2 m, for longer cables the voltage drop must be taken into account.

2022-08-15 The product features and technical data specified do not express or imply any warranty. Technical modifications subject to change.

Working distance

The ideal working distance of the magnet related to the encoder is at an eccentricity of 0 mm and an axial distance of 1.1 mm. Deviation affects the accuracy as shown in following diagram.

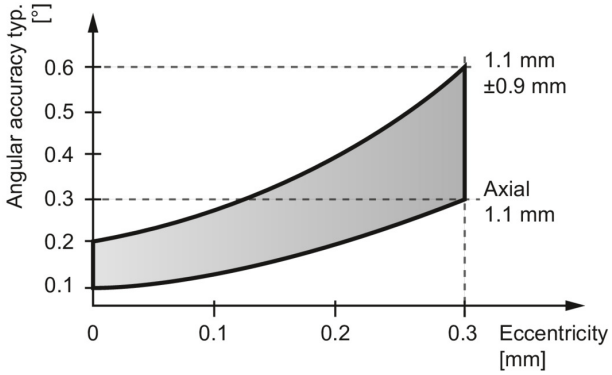

2022-08-15 The product features and technical data specified do not express or imply any warranty. Technical modifications subject to change.

EAM360-K - CANopen®

Encoder kit

Magnetic single- or multiturn encoders 14 bit ST / 18 bit MT

Dimensions

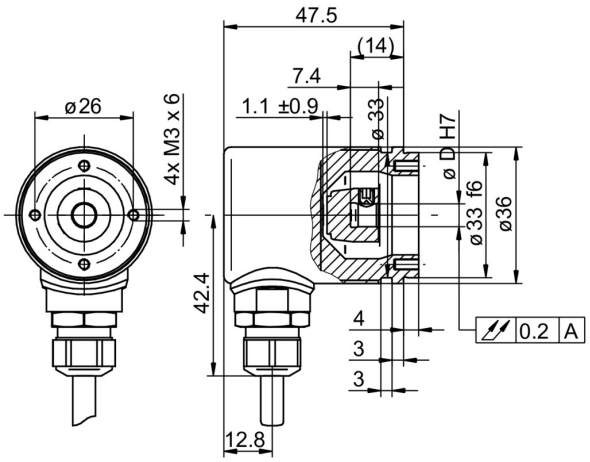

With cable

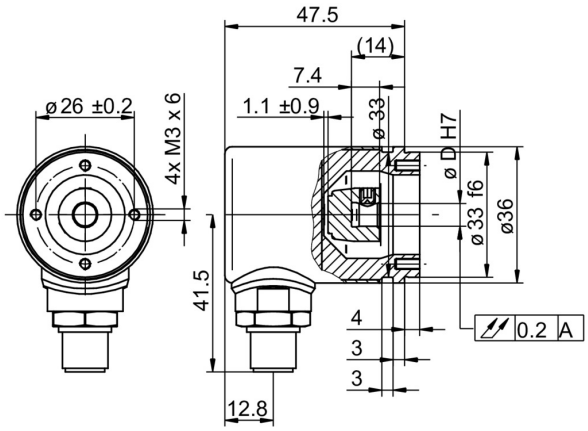

With Flange connector M12

2022-08-15 The product features and technical data specified do not express or imply any warranty. Technical modifications subject to change.

EAM360-K - CANopen®

Encoder kit

Magnetic single- or multiturn encoders 14 bit ST / 18 bit MT

Ordering reference

	EAM360	-	K	W	##	.	7	#	##	.	14	##	#	.	A
Product															
EAM360	EAM360														
Shaft type															
Kit			K												
Flange (kit)															
Synchro flange, ø33 mm, M3				W											
Magnet holder / bore diameter															
ø6 mm					6										
ø8 mm					8										
ø12 mm					C										
Protection class															
IP 67							7								
Connection															
Flange socket radial, M12, 8-pin, male contacts, CCW								B							
Cable radial, 2 m								L							
Flange socket radial, M12, 5-pin, male contacts, A-coded								N							
Voltage supply / interface															
10...30 VDC, CANopen (DS 406)									C6						
10...30 VDC, CANopen Lift (DS 417)									C7						
Resolution Singleturn															
14 Bit											14				
Resolution Multiturn															
No option												00			
18 Bit												18			
Resolution supplement															
No option													0		
4096 ppr TTL (RS422), 4 channels													H		
2048 ppr TTL (RS422), 4 channels													8		
1024 ppr TTL (RS422), 4 channels													5		
Operating temperature															
-40...+65 °C															A

2022-08-15 The product features and technical data specified do not express or imply any warranty. Technical modifications subject to change.