EAM580R-B - CANopen®/SAE J1939

Blind hollow shaft

Magnetic single- or multiturn encoders 14 bit ST / 18 bit MT

Overview

- Encoder single- or multiturn / CANopen®/SAE J1939
- E1 compliant design
- High protection IP 67
- High resistance to shock and vibrations
- Protection against corrosion CX (C5-M)
- Wire cross section 0.5 mm²
- Electronic gear function
- Applicable up to PLd (ISO 13849)

Technical data

Technical data - electrical ratings	
Voltage supply	10...30 VDC
Consumption typ.	20 mA (24 VDC, w/o load)
Initializing time	≤ 170 ms after power on
Interface	CANopen® SAE J1939
Function	Multiturn Singleturn
Profile conformity	CANopen® CiA communication profile DS 301, LSS profile DSP 305, device profile DS 406
Steps per revolution	≤16384 / 14 bit
Number of revolutions	≤262144 / 18 bit
Absolute accuracy	±0.15 ° (+20 ±15 °C) ±0.25 ° (-40...+85 °C)
Sensing method	Magnetic
Code sequence	CW: ascending values with clockwise sense of rotation; looking at flange
Output stages	CAN-Bus, LV (3.3 V) compatible ISO 11898
Interference immunity	EN 61000-6-2 ISO 11452-2:2004* / -5:2002* ISO 7637-2:2004* ISO 10605:2008 + Amd 1:2014 (CD ±8 kV / AD ±15 kV) * Severity level according to ECE R10 (Rev. 4)
Emitted interference	EN 61000-6-4 CISPR 25:2008 (30...1000 MHz) ISO 7637-2:2004* * Severity level according to ECE R10 (Rev. 4)

Technical data - electrical ratings	
$MTTF_d$ (ISO 13849)	High (>100 years) Use in safety functions exclusively based on Application Note and MTTFd reliability prediction (request separately).
Approval	UL approval / E217823
Technical data - mechanical design	
Size (flange)	ø58 mm
Shaft type	ø10...15 mm (blind hollow shaft)
Protection EN 60529	IP 67 (with shaft seal)
Operating speed	≤6000 rpm
Starting torque	≤2.5 Ncm (+20 °C, IP 67)
Moment of inertia	46.75 gcm²
Material	Housing: steel, powder-coated Flange: aluminium Hollow shaft: stainless steel
Corrosion protection	IEC 60068-2-52 Salt mist for ambient conditions CX (C5-M) according to ISO 12944-2
Operating temperature	-40...+85 °C (see general information)
Relative humidity	95 %
Resistance	EN 60068-2-6 Vibration 30 g, 10-2000 Hz EN 60068-2-27 Shock 500 g, 1 ms
Weight approx.	250 g
Connection	Flange connector M12, 5-pin Cable 2 m

2022-03-01 The product features and technical data specified do not express or imply any warranty. Technical modifications subject to change.

EAM580R-B - CANopen®/SAE J1939

Blind hollow shaft

Magnetic single- or multiturn encoders 14 bit ST / 18 bit MT

General information

Self-heating interrelated to speed, protection, attachment method and ambient conditions as well electronics and supply voltage must be considered for precise thermal dimensioning. Self-heating is supposed to approximates 12 K (IP 67 protection) per 1000 rpm. Operating the encoder close to the maximum limits requires measuring the real prevailing temperature at the encoder flange.

Terminal assignment

Cable
for connection reference **-L**

Core colour	Signals
white	0 V
brown	+Vs
green	CAN_H
yellow	CAN_L
grey	CAN_GND
Cable data: 5 x 0.5 mm²	

Flange connector M12, 5-pin
for connection reference **-N**

Pin	Signals
1	CAN_GND
2	+Vs
3	0 V
4	CAN_H
5	CAN_L

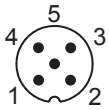

CANopen® features

Operating modes	Timer-driven (Event-Time) Synchronously triggered (Sync)
Node Monitoring	Heartbeat Node guarding
Programmable parameters	Operating modes Total resolution Scaling Electronic gear function
Diagnosis	Multiturn sensing Position error Temperature exceeding Speed exceeding
Default	50 kbit/s, Node ID 1 (DS406) 250 kbit/s, Node ID 4 (DS417)

SAE J1939 features

Programmable parameters	Total resolution Scaling
Diagnosis	Multiturn sensing Position error Temperature exceeding Speed exceeding
Default	250 kbit/s ECU address 172

The product features and technical data specified do not express or imply any warranty. Technical modifications subject to change.
2022-03-01

EAM580R-B - CANopen®/SAE J1939

Blind hollow shaft

Magnetic single- or multiturn encoders 14 bit ST / 18 bit MT

Dimensions

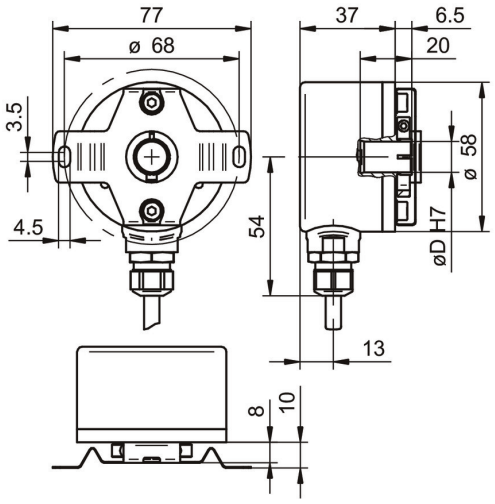

With cable and stator coupling

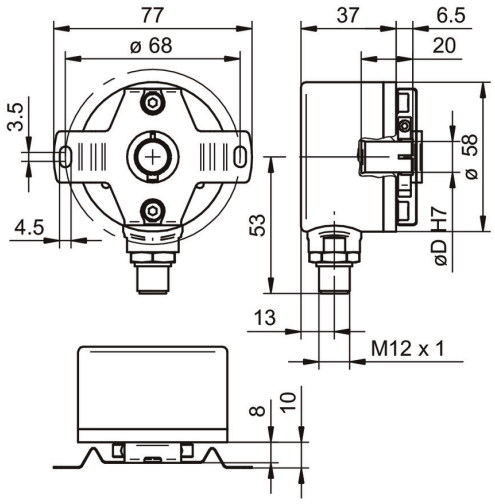

With flange connector M12 and stator coupling

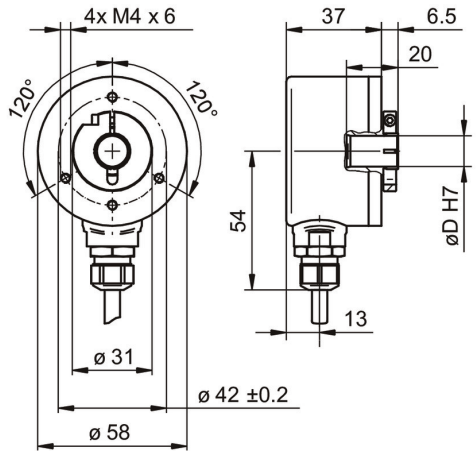

With cable w/o stator coupling

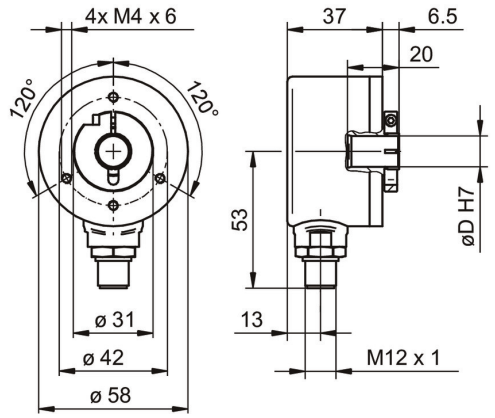

With flange connector M12 w/o stator coupling

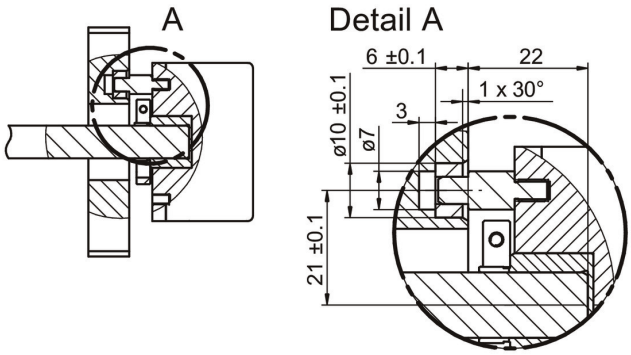

Torque pin

The product features and technical data specified do not express or imply any warranty. Technical modifications subject to change.
2022-03-01

EAM580R-B - CANopen®/SAE J1939

Blind hollow shaft

Magnetic single- or multiturn encoders 14 bit ST / 18 bit MT

Ordering reference

	EAM580R	-	B	#	##	.	7	#	##	.	14	##	#	.	A
Product															
	EAM580R														
Shaft type															
Blind hollow shaft			B												
Flange (Hollow shaft)															
Without stator coupling				N											
With stator coupling 68 mm				A											
Pin torque support 5 mm, axial				E											
Blind hollow shaft															
ø10 mm, clamping ring, A-side					A										
ø12 mm, clamping ring, A-side					C										
ø14 mm, clamping ring, A-side					E										
ø15 mm, clamping ring, A-side					F										
Protection class															
IP 67							7								
Connection															
Cable radial, 2 m								L							
Flange socket radial, M12, 5-pin, male contacts, A-coded								N							
Voltage supply / interface															
10...30 VDC, CANopen (DS 406)									C6						
10...30 VDC, SAE J1939									C9						
Resolution Singleturn															
14 Bit											14				
Resolution Multiturn															
No option												00			
18 Bit												18			
Resolution supplement															
No option													0		
4096 ppr TTL (RS422), 4 channels													H		
2048 ppr TTL (RS422), 4 channels													8		
1024 ppr TTL (RS422), 4 channels													5		
Operating temperature															
-40...+85 °C															A

The product features and technical data specified do not express or imply any warranty. Technical modifications subject to change.
2022-03-01