Baumer
Passion for Sensors

HÜBNER
BERLIN
A Baumer Brand

microGen
Energy Harvesting

Operating Manual

HMG10 & HMG10P Profibus DP

Absolute Encoder

EN-US

V1, T1 | 9/13/2021 | 11242667

List of contents

1 About this document ... 4

1.1 Purpose ... 4

1.2 Warnings in this manual ... 4

1.3 Labels in this manual ... 4

1.4 Disclaimer ... 5

1.5 Scope of delivery ... 5

1.6 Name plate ... 5

1.7 Maintenance and service life ... 6

1.8 Approvals and warranty ... 6

1.9 Temperature range for operation and storage ... 6

2 General information ... 7

3 Transport and storage ... 8

3.1 Transport ... 8

3.2 Delivery inspection ... 8

3.3 Storage ... 8

4 Description ... 9

4.1 Rotary encoder ... 9

4.2 Mounting accessories (not included) ... 10

4.3 Tools required ... 11

5 Installation ... 12

5.1 Positioning the support plate ... 12

5.2 Attaching the torque arm to the device ... 14

5.3 Blind hollow shaft encoder installation ... 15

5.4 Mounting the encoder to cone shaft ... 17

5.5 Hollow shaft mount ... 19

5.6 Mounting the torque arm at drive ... 21

5.6.1 HMG10 installation versus HOG10 ... 22

5.7 Avoiding and calculating angular errors ... 24

6 Electrical installation ... 25

6.1 Profibus DP ... 26

6.1.1 Profibus DP features ... 26

6.1.2 Profibus connection via connecting cable ... 27

6.1.3 Pin assignment Profibus DP ... 29

6.1.3.1 Mating connector (4-pin, A-coded) ... 30

6.1.3.2 Mating connector (5-pin, B-coded) ... 30

6.1.3.3 Mating connector (5-contact, B-coded) ... 30

6.1.4 Terminal box Profibus DP ... 31

6.1.4.1 Setting the terminating resistor ... 31

6.1.4.2 Setting the bus user address ... 31

6.2 Terminal box ... 32
6.2.1 Pin assignment at terminal box ... 32
6.2.2 Output signals additional incremental output (optional) ... 32
6.2.3 Switching level additional output incremental (optional) ... 33
6.2.4 Programming interface (only for programmable variant) ... 33
6.2.5 LED activity indicator ... 33
6.2.6 Output switching behavior Speed switch (optional) ... 34
6.2.7 Connecting the supply cable ... 34
6.2.8 Pin assignment ... 36
6.3 Sensor cable ... 37
6.4 Z-PA.SDL.1 WLAN adapter: Programming device for HMG10P/PMG10P ... 37
7 Disassembly ... 38
7.1 Removing the encoder from blind hollow shafts or cone shafts ... 39
7.1.1 Loosen fastening aids provided at the blind hollow shaft ... 39
7.1.2 Threaded pin to secure at blind hollow shaft ... 40
7.1.3 Detaching the encoder from blind hollow shafts ... 41
7.2 Detaching the encoder from through-hollow shaft ... 42
8 Technical data ... 43
8.1 Blind-hollow shaft dimensions ... 45
8.2 Cone shaft dimensions ... 45
8.3 Through hollow shaft dimensions ... 46

1 About this document

1.1 Purpose

This operating manual (subsequently referred to as *manual*) allows the safe and efficient handling of the product .

The manual does not provide instructions on operating the machine in which the product is integrated. Information on this is found in the operating manual of the machine.

The manual is a constituent part of the product. It must be kept in the immediate vicinity of the product and must be accessible to personnel at all times.

Personnel must have carefully read and understood this manual before beginning any work. The basic prerequisite for safe working is compliance with all safety instructions and handling instructions given in this manual.

In addition, the local occupational health and safety regulations and general safety regulations apply.

The illustrations in this manual are examples only. Deviations are at the discretion of Baumer at all times.

1.2 Warnings in this manual

Warnings draw attention to potential personal injury or material damage. The warnings in this manual indicate different hazard levels:

Symbol	Warning term	Explanation
	DANGER	Indicates imminent danger entailing a high risk of death or serious personal injury if not being avoided.
	WARNING	Indicates a possible danger entailing medium risk of death or (serious) personal injury if not being avoided.
	CAUTION	Indicates a danger with low risk, which could lead to light or medium injury if not avoided.
	NOTE	Indicates a warning of material damage.
	INFO	Indicates practical information and tips that enable optimal use of the devices.

1.3 Labels in this manual

Identifier	Use	Example
Dialog element	Indicates dialog elements.	Click the ***OK*** button.
Unique name	Indicates the names of products, files, etc.	*Internet Explorer* is not supported in any version.
`Code`	Indicates entries.	Enter the following IP address: `192.168.0.250`

1.4 Disclaimer

The manufacturer is not liable for personal injury and/or property damage resulting from improper use of the device.

1.5 Scope of delivery

The scope of delivery includes:

- 1 x rotary encoder
- 1 x instruction manual
- 1 x General information leaflet

In addition, you can find the following information, among other things, in digital format at www.baumer.com:

- Data sheet
- Web interface manual
- Manual Profibus
- 3D CAD drawing
- GSD file for Profibus connection
- Certificates (EU conformity declaration, Fieldbus certificate, etc.)

Also see about this

Rotary encoder [▸ 9]
Mounting accessories (not included) [▸ 10]

1.6 Name plate

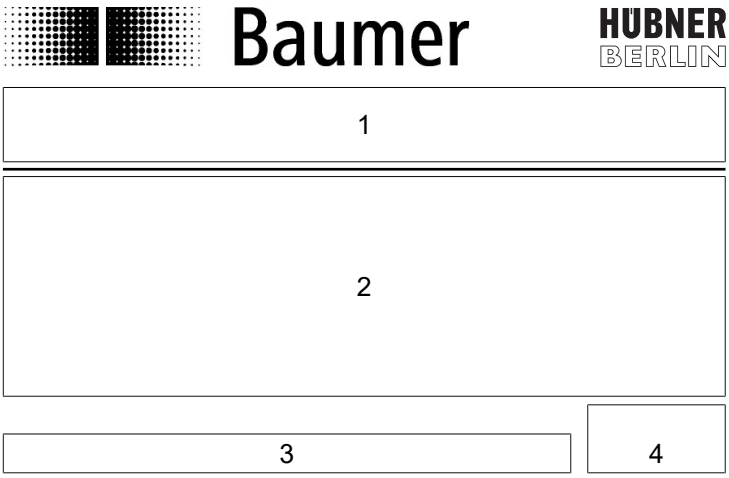

1	Product name, product code, material number	2	Serial number, technical data, MAC address
3	Baumer Website	4	Labels

1.7 Maintenance and service life

The device may only be opened for assembly and maintenance work as described in the present instruction manual. Any repair or maintenance work requiring fully opening the device must be carried out by the manufacturer only.

Do not perform any modifications at the device.

The expected service life of the device depends on the ball bearings featuring permanent lubrication.

For any queries or subsequent deliveries refer to the product data specified on the device label, in particular type and serial number.

1.8 Approvals and warranty

Declaration of conformity according to the prevailing country-specific directives.

We grant a 2-year warranty in line with the conditions of the German Electrical and Electronic Manufacturers' Association (ZVEI).

INFO

warranty seal

Any breaking of the seal provided at the device will result in loss of warranty.

1.9 Temperature range for operation and storage

The storage temperature of the device ranges from -15 ... +70 °C

The device operating temperature range ranges between -40 ... +85 °C, measured at housing.

2 General information

Instructions for appropriate use

This product is a precision device designed for the detection of objects, the acquisition of physical measuring units and for the evaluation of measured values for output in the form of electrical signals for the higher-level system.

Unless not especially labelled, the product must not be used in potentially explosive atmospheres.

Set-up

Installation, mounting and adjustment of this product may only be executed by skilled and authorised personnel.

Mounting

Only use the fasteners and fastener accessories intended for this product for installation. Outputs not in use must not be wired. Unused wires of cable outputs must be insulated. Do not go below the permissible cable bending radii. Disconnect the system from power before the product is electrically connected. Use shielded cables to prevent electro-magnetic interference. If the customer assembles plug connections on shielded cables, then EMC-version plug connections should be used and the cable shield must be connected to the plug housing across a large surface area.

Disposal (environmental protection)

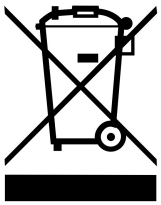

Do not dispose of electrical and electronic equipment in household waste. The product contains valuable raw materials for recycling, which is why the old product must be returned to an authorised collecting point for correct disposal/recycling. For further information see www.baumer.com.

3 Transport and storage

3.1 Transport

NOTICE

Material damage due to improper transport.

a) Ensure maximum diligence when unloading the delivered packages as well as when transporting them inside the company.

b) Note the information and symbols on the packaging.

c) Only remove packaging immediately before mounting.

3.2 Delivery inspection

Upon receipt, immediately inspect the delivery for completeness and transport damage.

Claim any defect as soon as it is detected. Damages can only be claimed within the applicable claims deadlines.

In case of externally visible transport damage, proceed as follows:

Instruction:

a) Do not accept the delivery or only with reservations.

b) Note the scope of the damage on the transport documents or the delivery slip of the carrier.

c) Initiate the claim.

3.3 Storage

Store the product at the following conditions:

- Ever store the device in the original packaging only.
- Do not store outdoors.
- Store dry and free from dust.
- Do not expose to aggressive media.
- Keep away from the sun.
- Avoid mechanical agitation.
- Storage temperature: -15 ... +70 °C..
- Ambient humidity:.
- When storing for longer than 3 months, regularly check the general state of all parts and the packaging.

4 Description

4.1 Rotary encoder

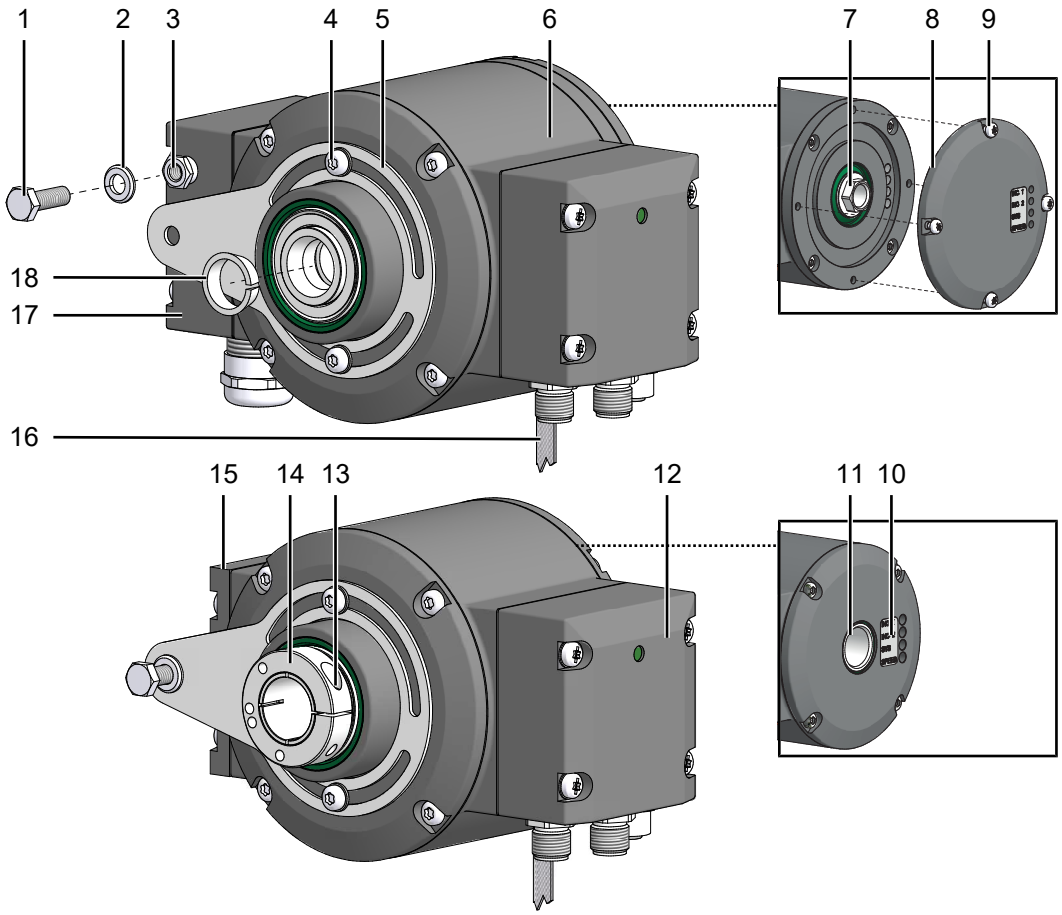

Ill. 1: Description HMG10

1	Hexagon head screw M6x18 mm (ISO 4017)	2	Washer B6.4 (ISO 7090)
3	Self-locking nut M6 (ISO 10511)	4	Torx screw M4x10 mm, TX20 (ISO 14583)
5	Torque plate 360°, attachable in any position	6	Housing
7	Blind hollow shaft or cone shaft with wrench flat SW 17 mm	8	Cover
9	Torx/slotted head screw M4x10 mm (DIN 7964)	10	LED activity indicator
11	Through hollow shaft	12	Bus terminal box Profibus DP
13	Torx screw M3x12 mm (ISO 7045)	14	Clamping ring
15	Blind cover (device without additional output, without speed switch and without programming interface)	16	Grounding strap, length approx. 230 mm
17	Additional incremental output (optional), speed switch (optional), programming interface (only HMG10P)	18	Clamping element, not for cone shaft

4.2 Mounting accessories (not included)

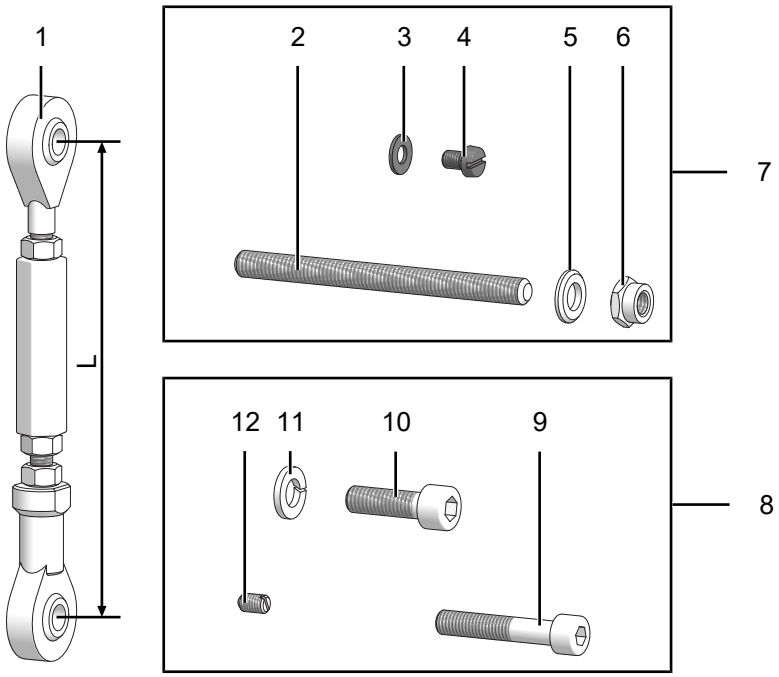

Ill. 2: Mounting accessories

1	Torque arm of length L (see table)	2	Threaded rod M6, variable length ≤ 210 mm
3	Washer B6.4 for grounding strap (ISO 7090)	4	Cheese-head screw M6x8 mm for grounding strap (ISO 1207)
5	Washer B6.4 (ISO 7090)	6	Self-locking nut M6 (ISO 10511)
7	Mounting set, order number 11077197	8	Mounting/dismounting set, order number 11077087
9	Cheese-head screw M8x45 mm (ISO 4762)	10	Cheese-head screw M6x30 mm (ISO 4762)
11	Spring washer 6 (DIN 7980)	12	Threaded pin M6x10 mm (ISO 7436)

The torque arm is available in different versions:

Torque arm	Order number
Standard	
67 - 70 mm	11043628
125 (±5) mm, may be shortened down to ≥ 71 mm	11004078
440 (+20/15) mm, may be shortened down to ≥ 131 mm	11002915
Insulated	
67 - 70 mm	11054917
125 (±5) mm, may be shortened down to ≥ 71 mm	11072795
440 (+20/15) mm, may be shortened down to ≥ 131 mm	11082677

4.3 Tools required

- 3 mm, 5 mm, 6 mm
- 1,6×8 mm, 0,8×4 mm
- 10 mm (2×), 17 mm, 22 mm
- 10 mm, 20 mm

5 Installation

NOTICE

Equipment damage due to mechanical shock

Strong vibration may lead to overload by constraining force.

a) Never apply force. If properly assembled, everything fits smoothly together.

b) Use only suitable tools for disassembly (see chapter on disassembly).

NOTICE

Equipment damage by adhering liquids

Sticky liquids may damage sensing unit and ball bearings. Disassembling a device which is stuck to the axis can lead to destruction.

a) Do not use adhesive liquids to fasten the device.

5.1 Positioning the support plate

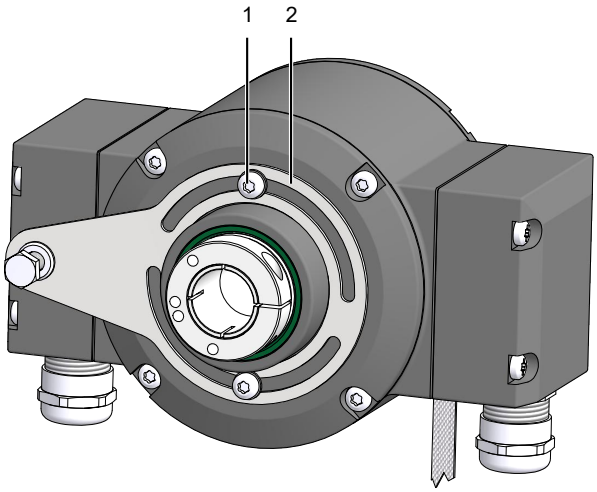

1	Torx screw M4x10 mm, TX20, ISO 14583	2	Torque plate 360°, attachable in any position

Tool

- ✪ 20 mm

Instruction:

a) Loosen the Torx screws.

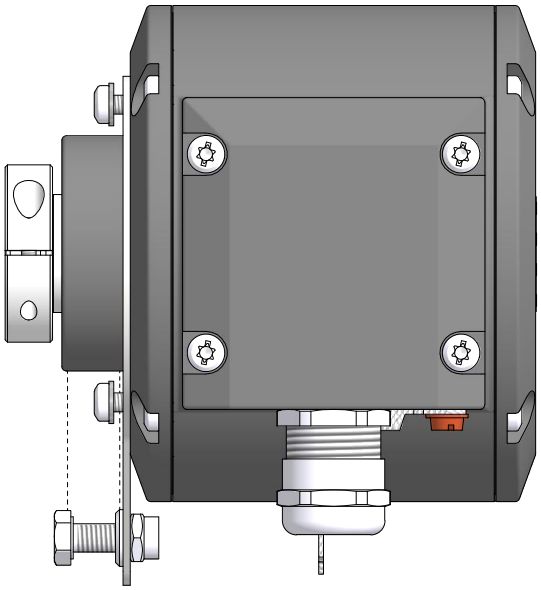

b) If required, you may remove the Torx screws completely for turning around the torque plate. Then carefully screw the Torx screws back in, but do not tighten already.

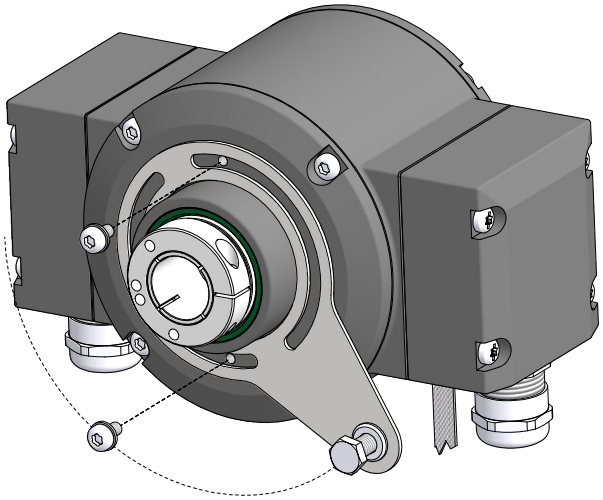

c) Move the torque support to the desired position.

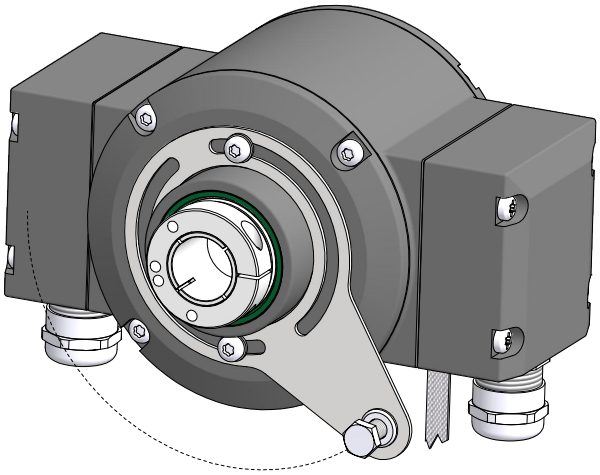

d) Tighten the Torx screw with 2-3 Nm.

5.2 Attaching the torque arm to the device

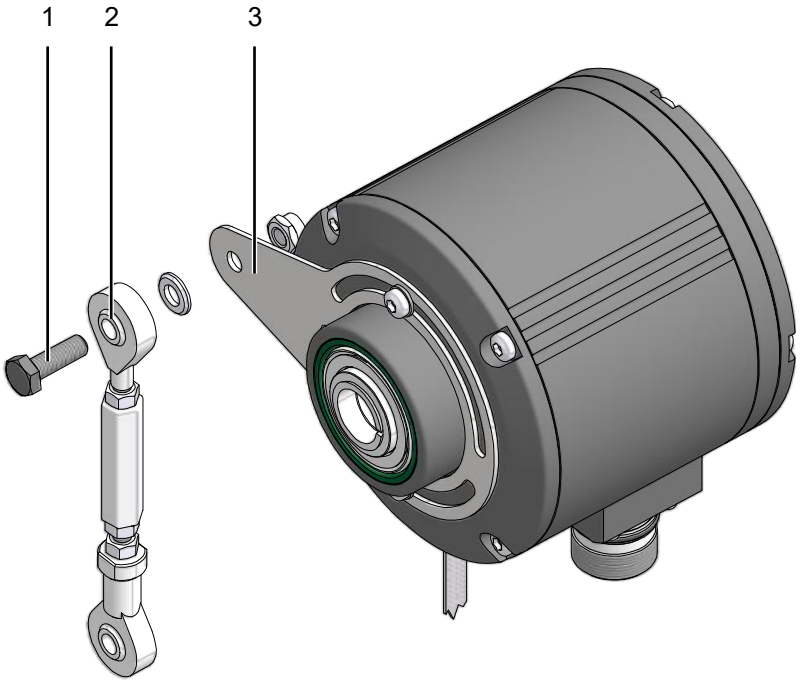

Ill. 3: Attaching the torque arm to the device

1	Hexagon head screw M6x18 mm (ISO 4017)	2	Torque arm
3	Torque plate		

Tool

- ⬡ 10 mm (2×)

Instruction:

- Screw torque arm onto the support plate using hexagon head bolt, washer and self-locking nut.

Also see about this

🗎 Avoiding and calculating angular errors [▸ 24]
🗎 Mounting the torque arm at drive [▸ 21]

5.3 Blind hollow shaft encoder installation

⚠ DANGER

Injuries caused by shaft rotation

Hair and clothing may get caught in rotating shafts which may lead to serious personal injury.

a) Make sure the device is idle.

b) Before performing any work at the device, make sure power supply is and remains disconnected.

⚠ DANGER

Explosion

Sparks may cause fire or explosion.

a) Do not use the device in the near vicinity of explosive or highly flammable materials.

NOTICE

Severe concentricity errors of drive shaft will reduce service life and entail angular errors.

Severe runout errors of the drive shaft cause vibrations that cut down on the encoder service live and may cause angular errors.

a) Keep concentricity errors of drive shaft down to a minimum (recommended ≤ 0.2 mm; ≤ 0.03 mm).

NOTICE

Equipment damage by mechanical overload

Rigid mounting may cause overload by constraining forces.

a) Do not limit the device mobility.

b) Observe the mounting instructions.

c) Adhere to the specified distances and/or angles.

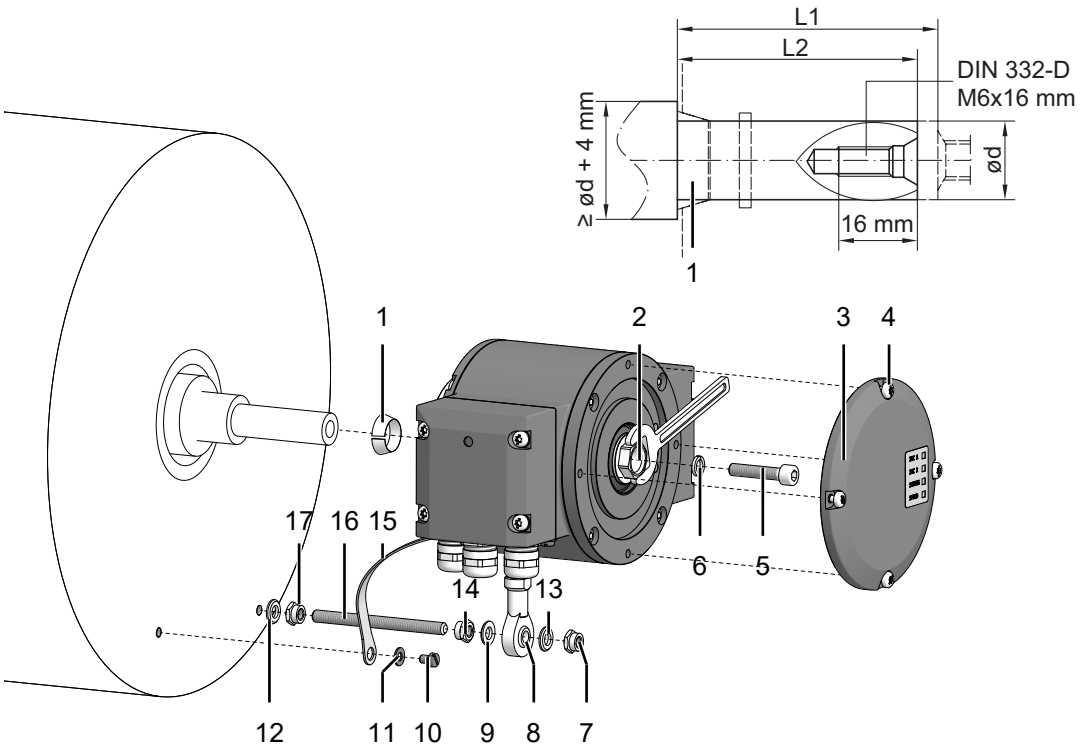

1	Clamping element (not for cone shaft)	2	Blind hollow shaft or cone shaft with wrench flat SW 17 mm
3	Cover	4	Torx/slotted head screw M4x10 mm (DIN 7964)
5	Cheese-head screw M6x30 mm (ISO 4762)	6	Spring washer 6 (DIN 7980)
7	Self-locking nut M6 (ISO 10511)	8	Torque arm
9	Washer B6.4 (ISO 7090)	10	Cheese-head screw M6x8 mm for grounding strap (ISO 1207)
11	Washer B6.4 for grounding strap (ISO 7090)	12	Washer B6.4 (ISO 7090)
13	Washer B6.4 (ISO 7090)	14	Self-locking nut M6 (ISO 10511)
15	Grounding strap	16	Threaded rod M6 (variable length ≤ 210 mm)
17	Self-locking nut M6 (ISO 10511)		

Shaft diameter (mm)	L1 (mm)	L2 (mm)
16_{h6}	53	52 (40-52)
20_{h6}	35	34 (25-34)

Tool

- 5 mm
- 10 mm, 17 mm
- 20 mm
- 1,6×8 mm
- Measuring gauge

Instruction:

a) Verify drive shaft about any concentricity error (see further links).

b) Mount the encoder in a way ensuring the electrical connection is protected against water ingress.

c) Loosen the encoder cover.

d) Apply grease onto the drive shaft.

e) Mount the encoder using cheese head screw, spring washer and clamping element. For doing so, tighten the screw to a torque of 6 Nm and secure by wrench if required.

f) Attach cover using the Torx/ slotted screws (4x).

g) Mount the torque arm together with threaded rod, washers (3x) and self-locking nuts (3x). Observe the torque arm mounting instructions (see further links).

h) Attach grounding strap using cheese head screw and washer.

Also see about this

Avoiding and calculating angular errors [▸ 24]

Mounting the torque arm at drive [▸ 21]

5.4 Mounting the encoder to cone shaft

⚠ DANGER

Injuries caused by shaft rotation

Hair and clothing may get caught in rotating shafts which may lead to serious personal injury.

a) Make sure the device is idle.

b) Before performing any work at the device, make sure power supply is and remains disconnected.

⚠ DANGER

Explosion

Sparks may cause fire or explosion.

a) Do not use the device in the near vicinity of explosive or highly flammable materials.

NOTICE

Severe concentricity errors of drive shaft will reduce service life and entail angular errors.

Severe runout errors of the drive shaft cause vibrations that cut down on the encoder service live and may cause angular errors.

a) Keep concentricity errors of drive shaft down to a minimum (recommended ≤ 0.2 mm; ≤ 0.03 mm).

NOTICE

Equipment damage by mechanical overload

Rigid mounting may cause overload by constraining forces.

a) Do not limit the device mobility.

b) Observe the mounting instructions.

c) Adhere to the specified distances and/or angles.

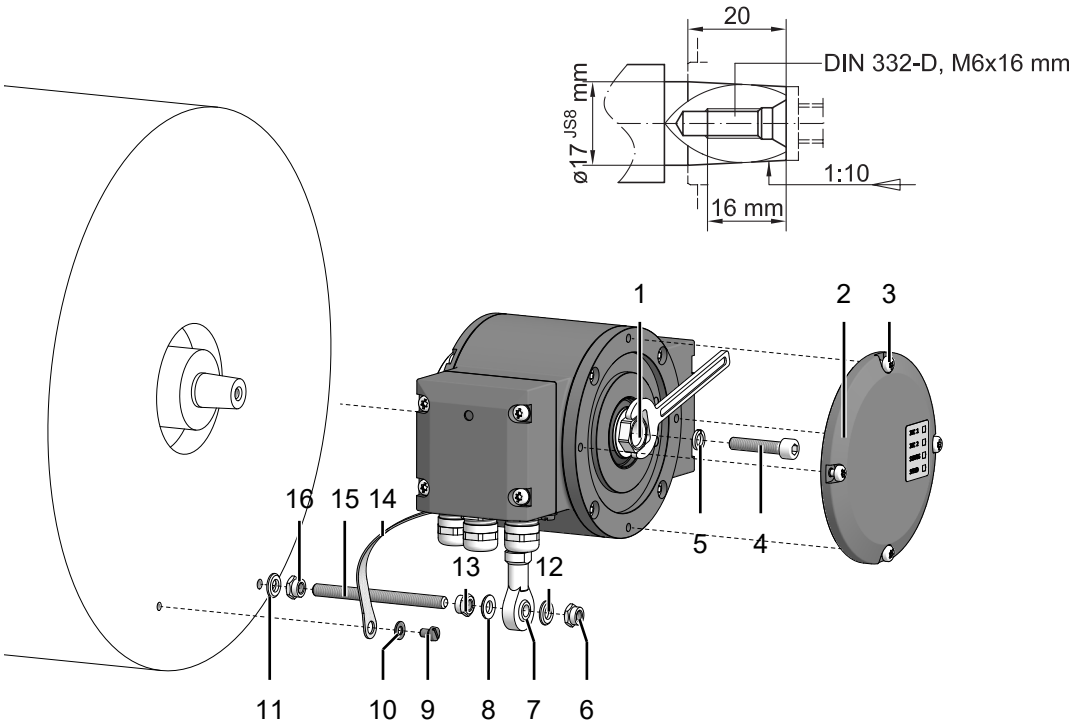

1	Blind hollow shaft or cone shaft with wrench flat SW 17 mm	2	Cover
3	Torx/slotted head screw M4x10 mm (DIN 7964)	4	Cheese-head screw M6x30 mm (ISO 4762)
5	Spring washer 6 (DIN 7980)	6	Self-locking nut M6 (ISO 10511)
7	Torque arm	8	Washer B6.4 (ISO 7090)
9	Cheese-head screw M6x8 mm for grounding strap (ISO 1207)	10	Washer B6.4 for grounding strap (ISO 7090)
11	Washer B6.4 (ISO 7090)	12	Washer B6.4 (ISO 7090)
13	Self-locking nut M6 (ISO 10511)	14	Grounding strap
15	Threaded rod M6 (variable length ≤ 210 mm)	16	Self-locking nut M6 (ISO 10511)

Tool

- 5 mm
- 10 mm, 17 mm
- 20 mm
- 1,6×8 mm
- Measuring gauge

Instruction:

a) Verify drive shaft about any concentricity error (see further links).

b) Mount the encoder in a way ensuring the electrical connection is protected against water ingress.

c) Loosen the encoder cover.

d) Apply grease onto the drive shaft.

e) Mount the encoder using cheese-head screw and spring washer. For doing so, tighten the screw with a torque of 3-4 Nm and secure with wrench if necessary.

f) Attach cover using the Torx/ slotted screws (4x).

g) Mount the torque arm together with threaded rod, washers (3x) and self-locking nuts (3x). Observe the torque arm mounting instructions (see further links).

h) Attach grounding strap using cheese head screw and washer.

Also see about this

Mounting the torque arm at drive [▸ 21]

Avoiding and calculating angular errors [▸ 24]

5.5 Hollow shaft mount

⚠ DANGER

Injuries caused by shaft rotation

Hair and clothing may get caught in rotating shafts which may lead to serious personal injury.

a) Make sure the device is idle.

b) Before performing any work at the device, make sure power supply is and remains disconnected.

⚠ DANGER

Explosion

Sparks may cause fire or explosion.

a) Do not use the device in the near vicinity of explosive or highly flammable materials.

NOTICE

Severe concentricity errors of drive shaft will reduce service life and entail angular errors.

Severe runout errors of the drive shaft cause vibrations that cut down on the encoder service live and may cause angular errors.

a) Keep concentricity errors of drive shaft down to a minimum (recommended ≤ 0.2 mm; ≤ 0.03 mm).

NOTICE

Equipment damage by mechanical overload

Rigid mounting may cause overload by constraining forces.

a) Do not limit the device mobility.

b) Observe the mounting instructions.

c) Adhere to the specified distances and/or angles.

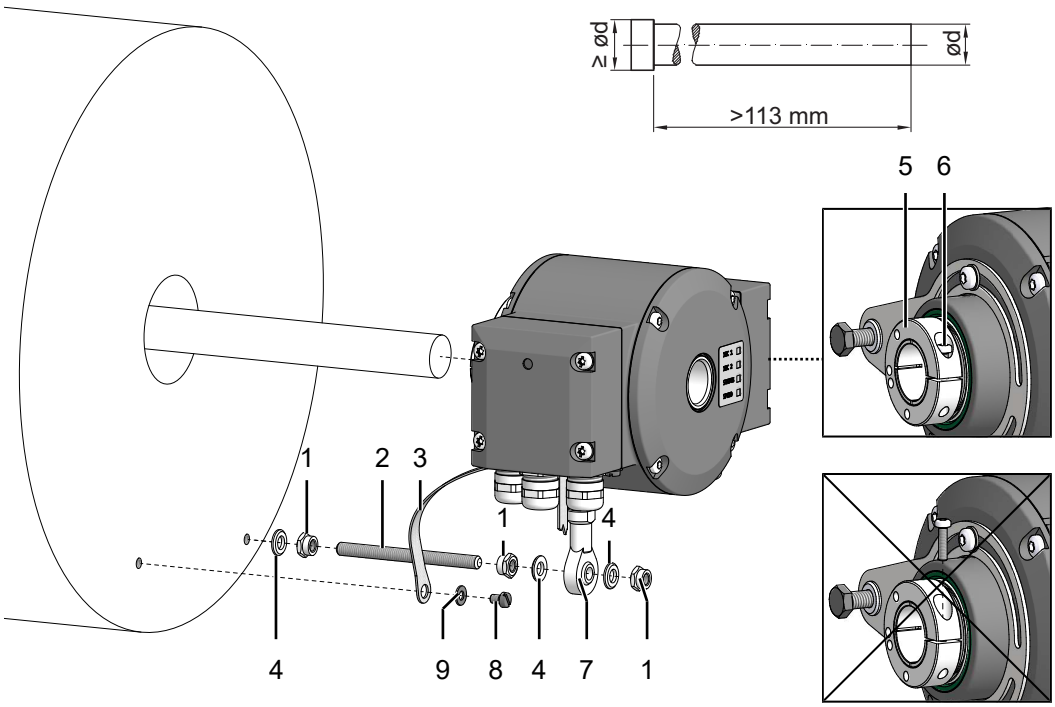

1	Self-locking nut M6 (ISO 10511)	2	Threaded rod M6 (variable length ≤ 210 mm)
3	Grounding strap	4	Washer B6.4 (ISO 7090)
5	Through hollow shaft	6	Torx screw M3x12 mm (ISO 7045)
7	Torque arm	8	Cheese-head screw M6x8 mm for grounding strap (ISO 1207)
9	Washer B6.4 for grounding strap (ISO 7090)		

Tool

- ⬡ 10 mm
- ✪ 10 mm
- ⊘ 1,6×8 mm
- Measuring gauge

Instruction:

a) Verify drive shaft about any concentricity error (see further links).

b) Mount the encoder in a way ensuring the electrical connection is protected against water ingress.

c) Apply grease onto the drive shaft.

d) Loosen the Torx screw on the clamping ring a little. Do not unscrew the screw completely.

e) Slide the encoder onto the drive shaft.

f) Tighten the Torx screw on the clamping ring with a torque of 2-3 Nm.

g) Mount the torque arm together with threaded rod, washers (3x) and self-locking nuts (3x). Observe the torque arm mounting instructions (see further links).

h) Attach grounding strap using cheese head screw and washer.

Also see about this

🗎 Avoiding and calculating angular errors [▸ 24]

🗎 Mounting the torque arm at drive [▸ 21]

5.6 Mounting the torque arm at drive

NOTICE

Incorrect mounting of the torque arm may reduce service life and cause angular errors

A torque arm backlash of ±0.03 mm, for example, means concentricity errors of 0.06 mm at the drive shaft which may result in severe angular errors.

a) Mount the torque arm without any backlash.

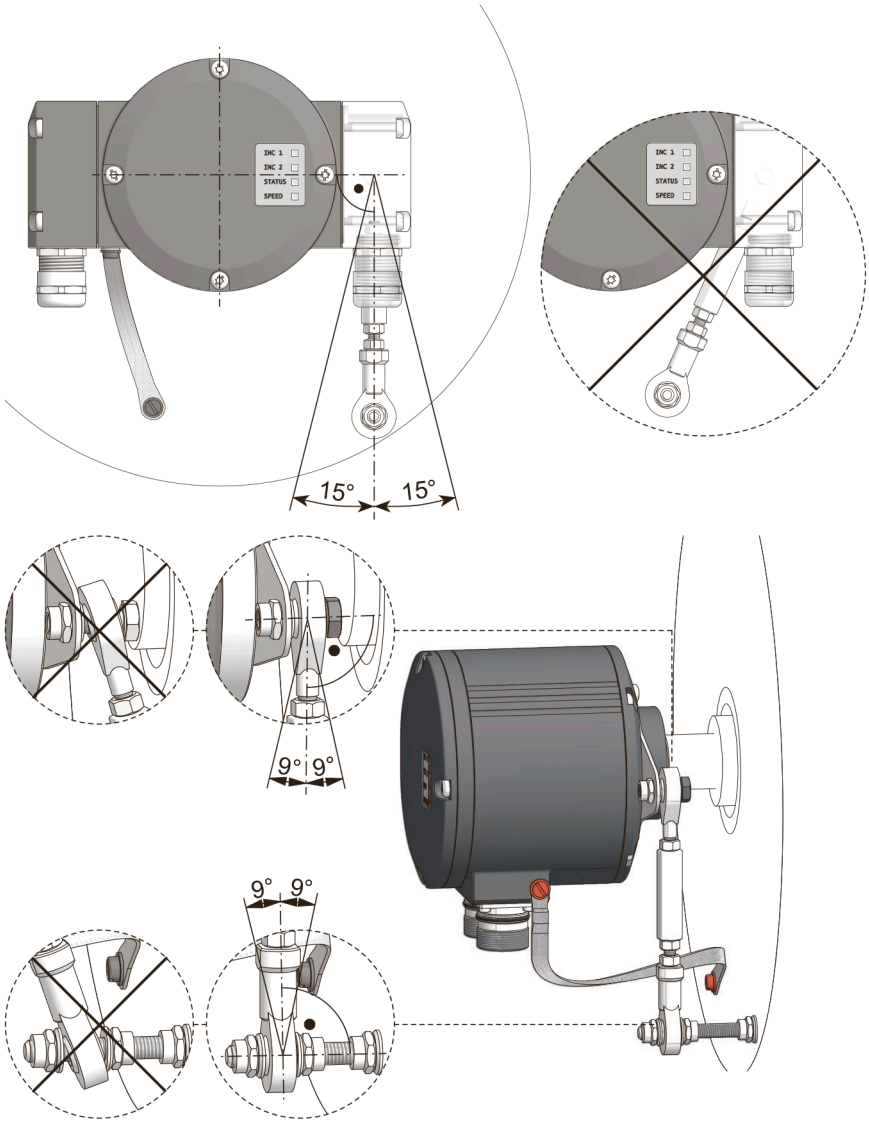

a) Mount the torque arm in a way that the shift towards the vertical encoder axis does not exceed 15° to the left or right.

b) Mount the torque arm in away that the shift towards the vertical encoder axis does not exceed 9° towards the back or front.

Also see about this

Avoiding and calculating angular errors [▸ 24]

5.6.1 HMG10 installation versus HOG10

Maximum compatibility in HOG10 mounting is obtained with the torque arm facing away from the motor.

However, this can only be achieved using the terminal box (connection code -P) and mounting that is shifted by 180°, or alternatively with a M23 flange connector.

Comparison / torque plate

HMG10 with 1x terminal box

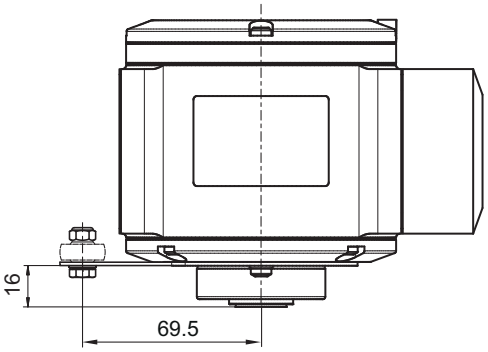

HOG10

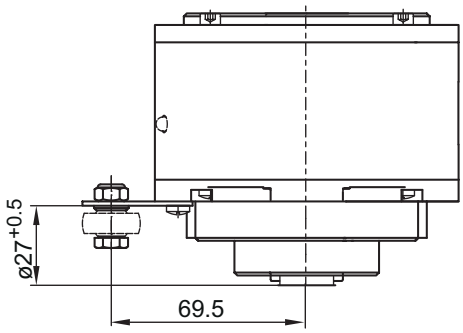

HMG10 with 2x terminal box

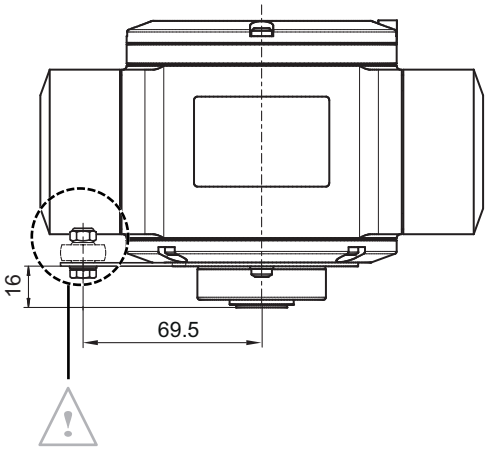

Or, for the 1st generation of HMG10 (2015-2020) using the cranked torque plate (no.11241731)

HMG10 with cranked support plate

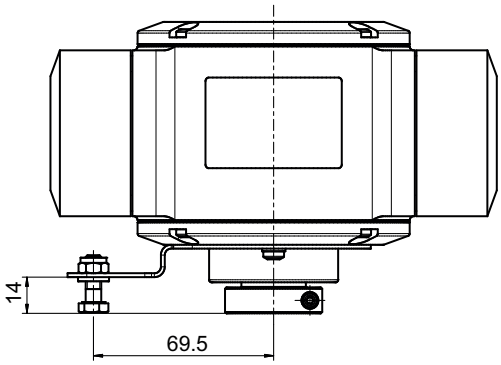

HMG10 (1. Generation)

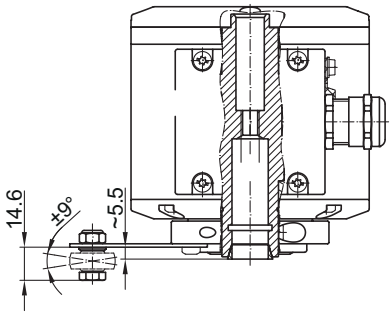

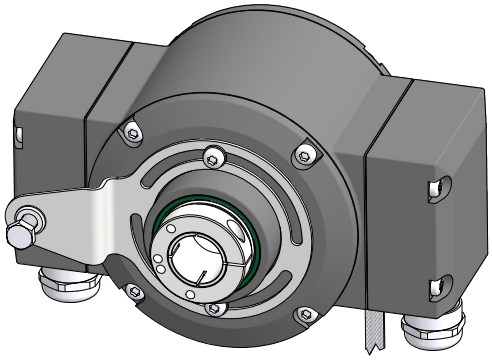

Also see about this

Avoiding and calculating angular errors [▸ 24]

5.7 Avoiding and calculating angular errors

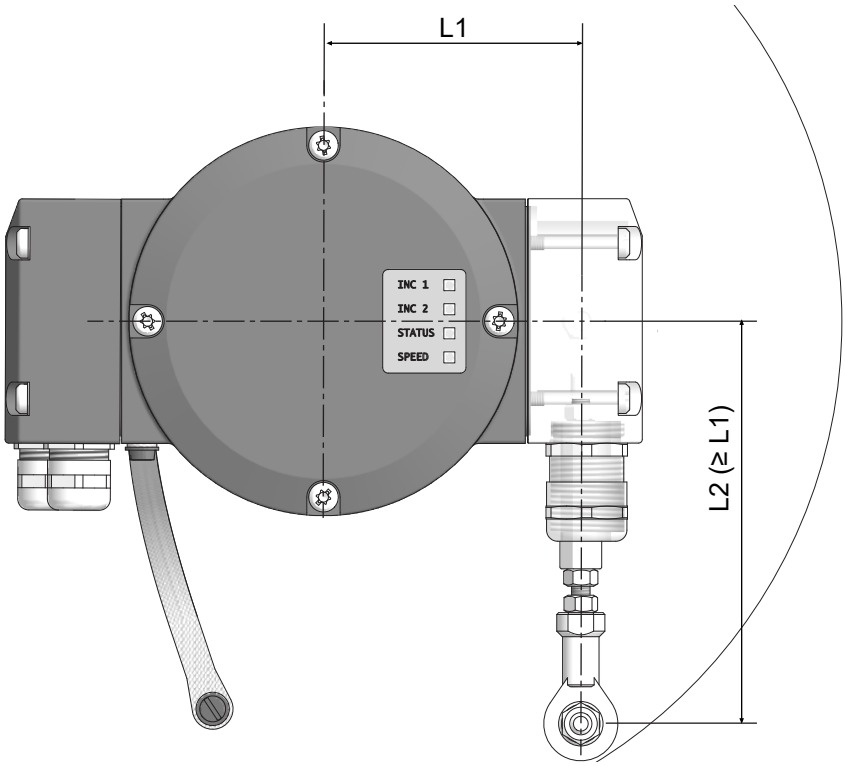

INFO

For further information, please call the telephone hotline at +49 (0)30 69003-111.

Instruction:

a) Make sure that concentricity errors of the drive shaft do not exceed 0.2 mm (0.03 mm recommended) to prevent angular errors.

b) Limit such angular errors by increased gap L1. For doing so, various torque plates for are available on request.

c) Note that length L2 of the torque arm should be ≥ L1. Where not possible, consider L2.

d) To calculate angular errors Δp_{mech} proceed as follows (R = runout error in mm and L1 = vertical gap of torque arm towards the device center in mm):
$\Delta p_{mech} = \pm 90°/\pi \times R/L1$
Calculation example:
With R= 0.06 mm and L1 = 69.5 mm, the angular error Δp_{mech} is ±0.025°.

6 Electrical installation

⚠ DANGER

Injury by to secondary damage

Encoder failure or incorrect signals may entail system control errors.

a) Eliminate secondary encoder damage by the relevant safety precautions in the downstream electronics.

NOTICE

Sensor damage due to faulty power supply.

The sensor can be damaged due to faulty power supply.

a) Operate the sensor only with protected low voltage and safe electrical isolation of protection class III.

NOTICE

Sensor damage or unintended operation due to work on live parts.

Work on live parts may lead to unintentional operation.

a) Disconnect the power before carrying out any cable.

b) Disconnect the power before connecting or disconnecting electrical connections.

NOTICE

Sensor damage by excessive switching voltage.

The sensor's overload limit is for protection only and not intended as limit for the permanently switching voltage.

a) Make sure that the maximum permitted switching voltage is not exceeded.

6.1 Profibus DP

6.1.1 Profibus DP features

INFO

For detailed instructions and GSD files for the Profibus interface visit the Baumer website www.baumer.com.

Fieldbus protocol	Profibus DP V0 or Profibus DP V2 [I]
Features	Profibus DP V0 = Device Class 1 and 2 Profibus DP V2 = Device Class 3 and 4
Data Exchange Functions	Input: position value Output: preset value
Preset value	The "Preset" parameter would set the device to a defined actual value corresponding to a defined axis position in the system.
Parameter functions	Direction of rotation: Whether the output should deliver increasing or decreasing values according to the selected sense rotation can be configured in the operating parameters. Scaling: Steps per revolution and total resolution can be configured.
Diagnostic tools	The device supports the following error messages: Position error
User address	Factory setting: 00

[I] According to product variant

6.1.2 Profibus connection via connecting cable

NOTICE

Equipment damage by ESD

The electronic components in the device are sensitive to high voltage

a) Do not touch terminals or electronic components.

b) Protect output terminals from external voltage.

c) Do not exceed the maximum operating voltage.

NOTICE

Equipment damage by soiling

Soiling may cause short circuiting and damage of the sensing unit.

a) Ensure absolute cleanliness at all times when working with the device.

b) Prevent any oil or grease from penetrating inside the device.

NOTICE

Equipment damage due to dust or moisture

Inappropriate cable diameters may entail ingress of dust or moisture. In this case, the protection class is no longer ensured causing device failure or malfunction.

a) Use only appropriately sized cables to make sure the specified protection class is being ensured.

INFO

Connection cables are not included in delivery.

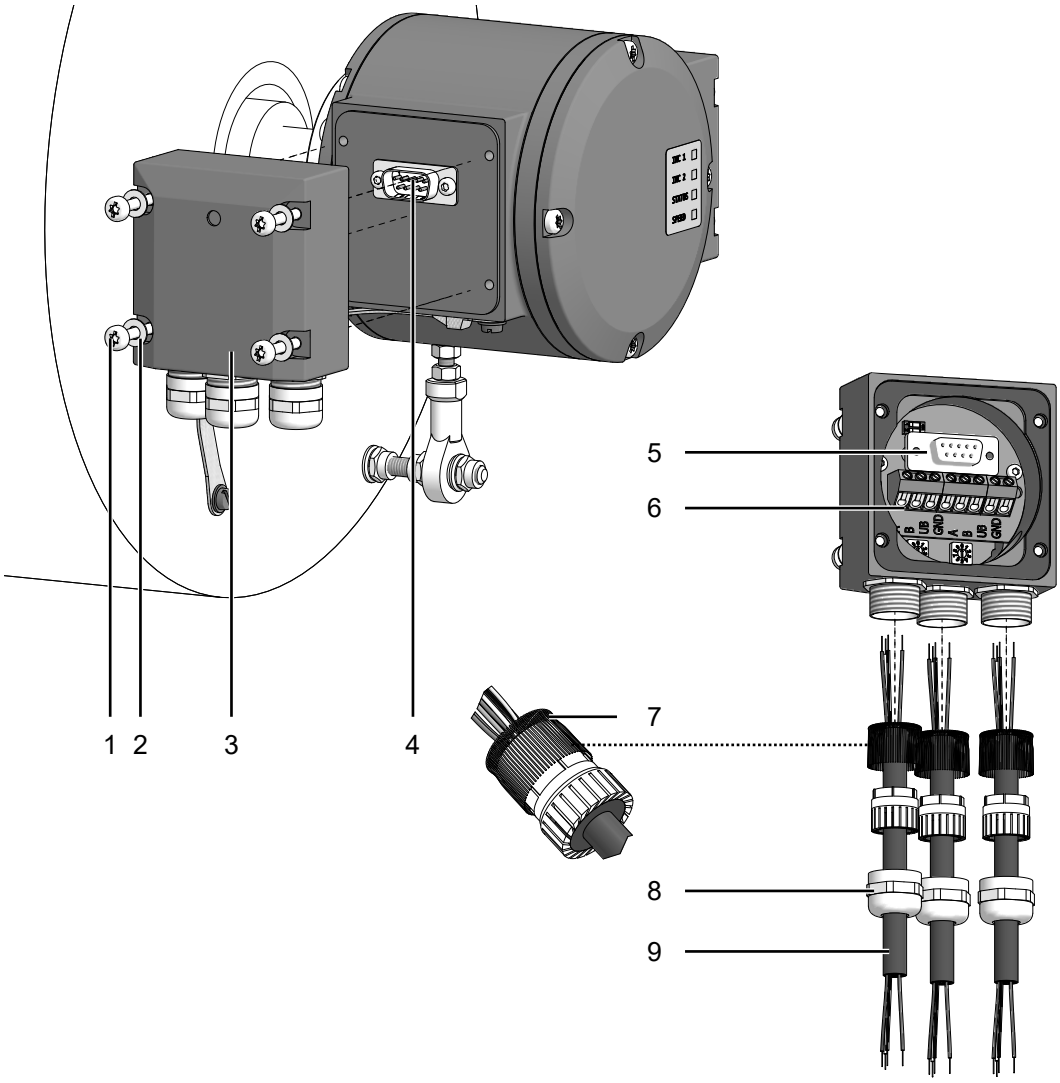

Ill. 4: Connecting the supply cable

1	Torx / slotted screw M4x32 mm	2	Washer A4 (DIN 137)
3	Bus terminal box Profibus DP	4	D-SUB connector
5	D-SUB socket	6	Terminals
7	Cable shield	8	Cable gland M16x1.5 mm (for cable diameter 5-9 mm)
9	Connection cables (cable diameter 5-9 mm)		

Tool

- ✪ 20 mm
- ⬡ 17 mm

Instruction:

a) Loosen the screws at the terminal box.

b) Remove the Profibus terminal box from the encoder.

c) Loosen the cable gland at the terminal box.

d) Insert the connection cables into the cable glands.

e) Assign the supply cables to the terminals.

f) Connect cable shield to cable gland and make sure it covers a large area.

g) Attach the cable gland to the terminal box.

h) Mount the terminal box at the encoder. To do this, tighten the screws with a torque of 2-3 Nm.

6.1.3 Pin assignment Profibus DP

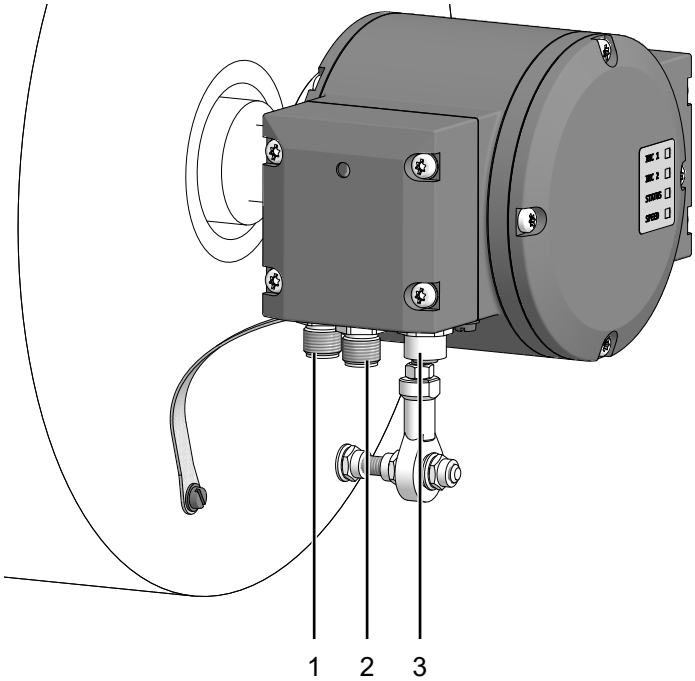

Ill. 5: Connections HMG10 Profibus DP

1	Mating connector (4-pin, A-coded)	2	Mating connector (5-pin, B-coded)
3	Mating connector (5-contact, B-coded)		

6.1.3.1 Mating connector (4-pin, A-coded)

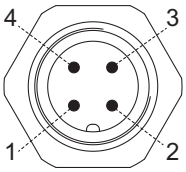

Ill. 6: Mating connector (4-pin, A-coded)

Pin	Connection	Description
1	UB	Operating voltage 10-30 V DC
2	-	Do not use
3	GND	Ground connection for UB
4	-	Do not use

6.1.3.2 Mating connector (5-pin, B-coded)

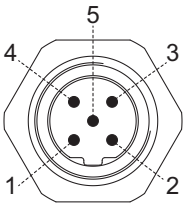

Ill. 7: Mating connector (5-pin, B-coded)

Pin	Connection	Description
1	-	Do not use
2	A	Negative serial data line
3	-	Do not use
4	B	Positive serial data line
5	-	Do not use

6.1.3.3 Mating connector (5-contact, B-coded)

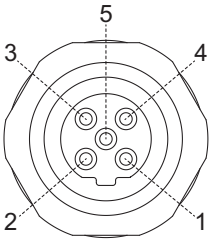

Ill. 8: Mating connector (5-contact, B-coded)

Mating connector	Connection	Description
1	-	Do not use
2	A	Negative serial data line
3	-	Do not use
4	B	Positive serial data line
5	-	Do not use

6.1.4 Terminal box Profibus DP

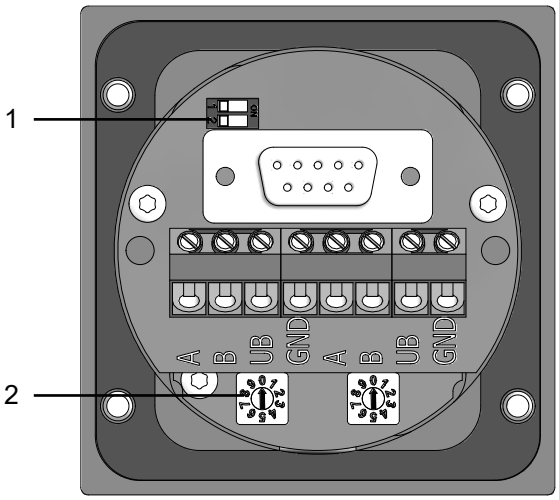

Ill. 9: Terminal box HMG10 Profibus DP

1	Setting the terminating resistors	2	Setting the user address

A	Negative serial data line, pair 1 and pair 2
B	Positive serial data line, pair 1 and pair 2
UB	Operating voltage 10-30 V DC
GND	Ground connection for UB

Tab. 1: Pin assignment

INFO

Connectors with the same designation are internally connected and identical in functionality. These internal terminal connections UB-UB / GND-GND may be loaded with max. 1 A each.

6.1.4.1 Setting the terminating resistor

ON = final bus user

OFF = any bus user

6.1.4.2 Setting the bus user address

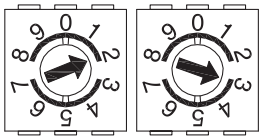

1. Digit user address

2. Digit user address

(Illustration shows example user address 23).

6.2 Terminal box

6.2.1 Pin assignment at terminal box

Connection	Description
Ub [I]	Operating voltage
0V [I]	Ground connection
A+ [I]	Output signal channel 1
A- [I]	Output signal channel 1 inverted
B+ [I]	Output signal channel 2 (90° offset to channel 1)
B- [I]	Output signal channel 2 inverted
R+ [I]	Zero pulse (reference signal)
R- [I]	Zero pulse inverted
nE+	System OK+ / Error output
nE-	System OK / Error output inverted
SP+ [II]	DSL_OUT1 / speed switch (open collector [III] or semiconductor relay [III])
SP- [II]	DSL_OUT2 / Speed switch (0 V [III] or semiconductor relay [III]
SA [IV]	RS485+ / programming interface
SB [IV]	RS485 / programming interface
dnu	do not use

[I] Additional output incremental (optional)

[II] Speed switch (optional)

[III] According to product variant

[IV] Programming interface (programmable product variant only)

6.2.2 Output signals additional incremental output (optional)

At positive rotating direction

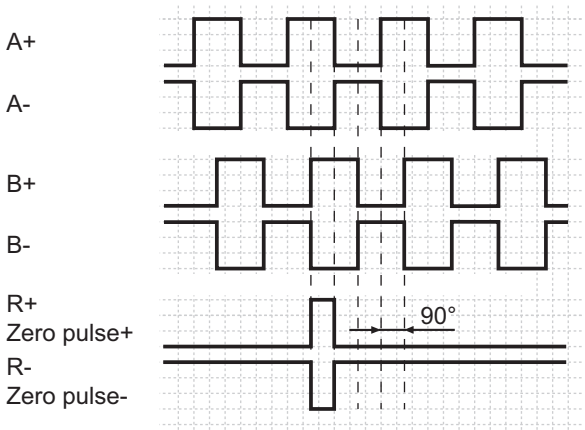

Ill. 10: Output signal behavior at positive direction of rotation

6.2.3 Switching level additional output incremental (optional)

Switching level	TTL/RS422	TTL/HTL (Vin = Vout) [I]
High/Low	≥ 2,5 V / ≤ 0,5 V	▪ ≥ 2,5 V / ≤ 0,5 V (TTL) ▪ ≥ Ub − 3 V / ≤ 1,5 V (HTL)
Transmission length	≤ 550 m bei 100 kHz	▪ ≤ 550 m bei 100 kHz (TTL) ▪ ≤ 350 m bei 100 kHz (HTL)
Output frequency	≤ 600 kHz	▪ ≤ 600 kHz (TTL) ▪ ≤ 350 kHz (HTL)

[I] The TTL/HTL output (Vin = Vout) at the additional incremental output is galvanically isolated and requires separate voltage supply.

Tab. 2: Switching level additional output incremental (optional)

6.2.4 Programming interface (only for programmable variant)

Encoder parameters such as additional output, switch-off and switch-on speeds can be changed and read out via connection SA and SB. The Z-PA.SDL1 WLAN adapter can be used for encoder access via web browser.

Also see about this

Z-PA.SDL.1 WLAN adapter: Programming device for HMG10P/PMG10P [▸ 37]

6.2.5 LED activity indicator

LED	red	green
INC1	No function	No function
INC2 (additional output incremental	▪ Undervoltage ▪ Overload ▪ Excess temperature	OK
Status	Internal error	OK
Speed	Speed higher than switching speed (overspeed)	Speed below switching speed

Tab. 3: LED activity indicator

6.2.6 Output switching behavior Speed switch (optional)

INFO

Default switching speed is 6000 rpm for HMG10P and PMG10P. HMG10 and PMG10 without programming interface come with the individually ordered permanent switching speed.

Event	Speed switching output state
During initialization	High-impedance (overspeed)
After initialization and speed being ≤ -ns (off)	High-impedance (overspeed)
-ns (off) < speed ≤ -ns (on)	Status unchanged Device rotation within this speed range during initialization results in status low-impedance (no overspeed) after initialization
-ns (on) < speed ≤ +ns (on)	Low impedance (No overspeed)
+ns (on) ≤ speed < +ns (off)	Status unchanged Device rotation within this speed range during initialization results in status low-impedance (no overspeed) after initialization
+ns (off) ≤ speed	High-impedance (overspeed)

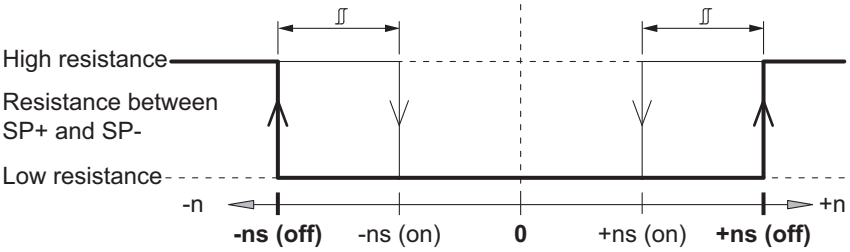

n = Speed

+ns (off) = Switch-off speed at shaft rotation in positive rotating direction*
-ns (off) = Switch-off speed at shaft rotation in negative rotating direction*

Switching hysteresis ∫∫: 10...100 % (factory setting = 10 % min. 1 Digit)

+ns (on) = Switch-on speed at shaft rotation in positive rotating direction*
-ns (on) = Switch-on speed at shaft rotation in negative rotating direction*

6.2.7 Connecting the supply cable

NOTICE

Equipment damage due to dust or moisture

Inappropriate cable diameters may entail ingress of dust or moisture. In this case, the protection class is no longer ensured causing device failure or malfunction.

a) Use only appropriately sized cables to make sure the specified protection class is being ensured.

INFO

Connection cables are not included in delivery.

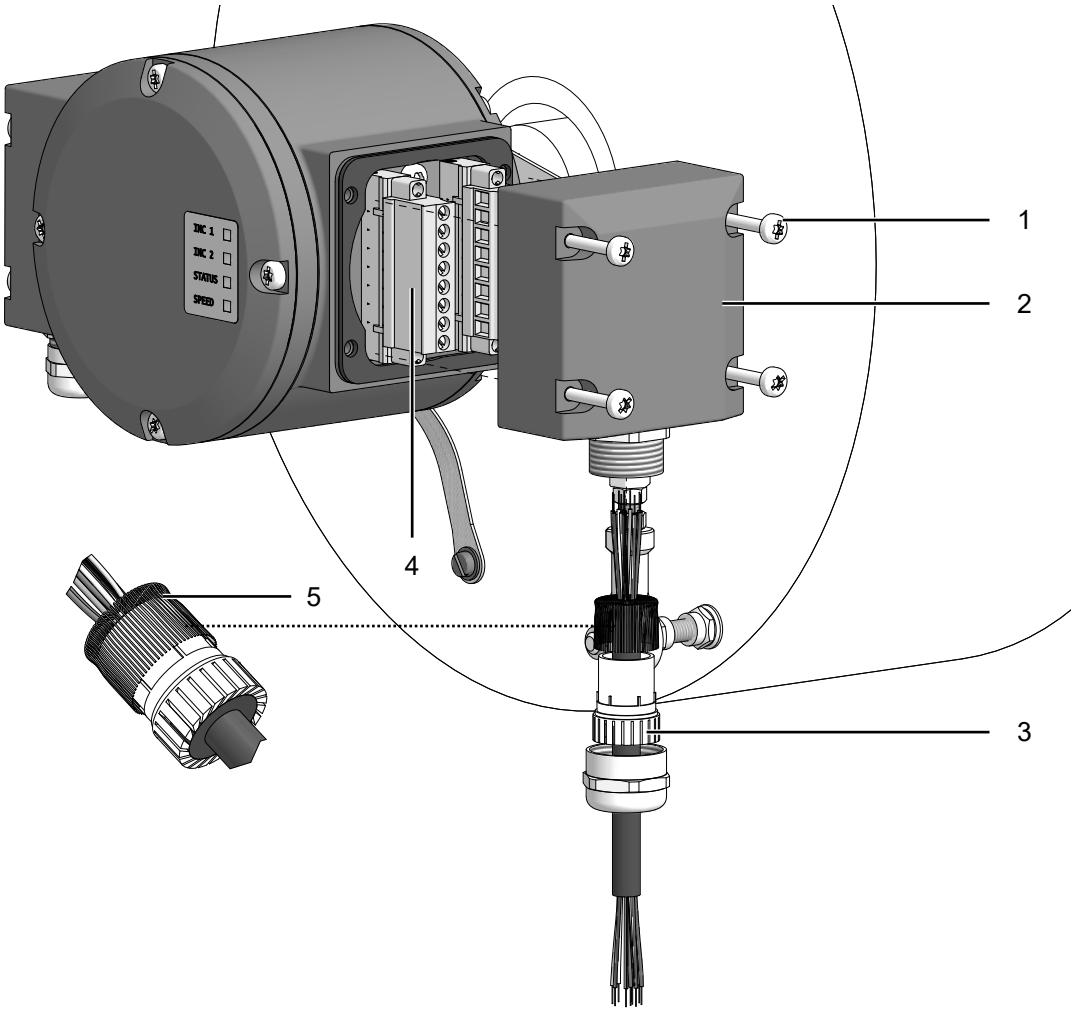

Ill. 11: Connecting the supply cable

1	Torx / slotted screw M4x32 mm	2	Terminal box cover
3	Cable gland M20x1.5 mm for cable diameter 5...13 mm	4	Connection terminals (wire cross-section ≤ 1.5 mm^2
5	Cable shield		

Tool

- ✪ 20 mm
- ⬡ 22 mm

Instruction:

a) Loosen the screws at the terminal box.

b) Lift the terminal box off the encoder.

c) Loosen the cable gland at the terminal box.

d) Insert the supply cables into the cable gland, let stick out approx. 50 mm of cable.

e) Connect cable shield to cable gland and make sure it covers a large area.

f) Assign the supply cables to the terminals.

g) Attach the cable gland to the terminal box.

h) Mount the terminal box at the encoder. To do this, tighten the screws with a torque of 2-3 Nm.

6.2.8 Pin assignment

NOTICE

Operating voltage present at the outputs results in encoder damage.

The encoder might be damaged by any operating voltage being present at the outputs.

a) Make sure that no operating voltage is present at the outputs.

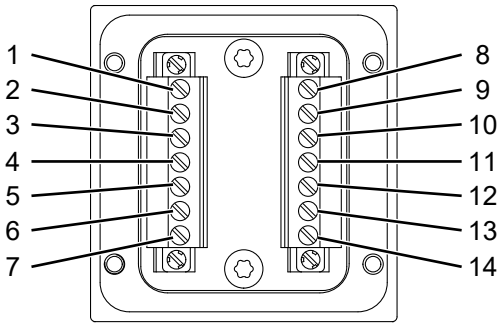

Ill. 12: Pin assignment

1	dnu / SP+ [I]	2	dnu / A+ [II]
3	dnu / A− [II]	4	dnu / B+ [II]
5	dnu / B− [II]	6	Ub [II]
7	0 V [II]	8	dnu / SP− [I]
9	nE+	10	nE−
11	dnu / R+ [II]	12	dnu / R− [II]
13	dnu / SA [III]	14	dnu / SB [III]

[I] Speed switch (optional)

[II] Additional output incremental (optional)

[III] Programming interface (programmable product variant only)

6.3 Sensor cable

HEK 8 - 10-core sensor cable for rotary encoders

2 cores 0.5 mm^2 (supply), 4 twisted pairs 0.25 mm^2 (signal), cable length on request.

HEK 17 - 16-core sensor cable for rotary encoders

2 cores 0.5 mm^2 (supply), 3 twisted pairs 0.14 mm^2 (signal), 4 cores 0.14 mm^2 (signal), 4 cores 0.22 mm^2 (data), cable length on request.

6.4 Z-PA.SDL.1 WLAN adapter: Programming device for HMG10P/PMG10P

INFO
For detailed function descriptions refer to the WLAN adapter installation and operating instructions.

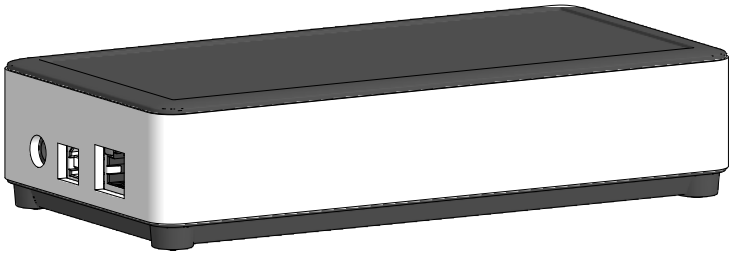

Ill. 13: Z-PA.SDL.1 WLAN adapter (ordering ref.: 11190106)

The Z-PA.SDL.1 WLAN adapter is for programming and monitoring the HMG10P/PMG10P encoder series.

The following encoder parameters enable parameterization (according to encoder version):

- Additional output (ppr number)
- Switch on and off speed

Programming device configuration and operation is via web browser.

7 Disassembly

NOTICE

Equipment damage due to mechanical shock

Strong vibration may lead to overload by constraining force.

a) Never apply force. If properly assembled, everything fits smoothly together.

b) Use only suitable tools for disassembly (see chapter on disassembly).

NOTICE

Equipment damage by adhering liquids

Sticky liquids may damage sensing unit and ball bearings. Disassembling a device which is stuck to the axis can lead to destruction.

a) Do not use adhesive liquids to fasten the device.

NOTICE

The device can be easily removed via the cheese-had screw (M8x45 mm, ISO 4762) and threaded pin (M6x10 mm, ISO 7436).

7.1 Removing the encoder from blind hollow shafts or cone shafts

⚠ DANGER

Burns caused by heat

The device heats up at high torque. There is a risk of getting burned after use.

a) Avoid overheating the device.

b) Wear suitable gloves.

7.1.1 Loosen fastening aids provided at the blind hollow shaft

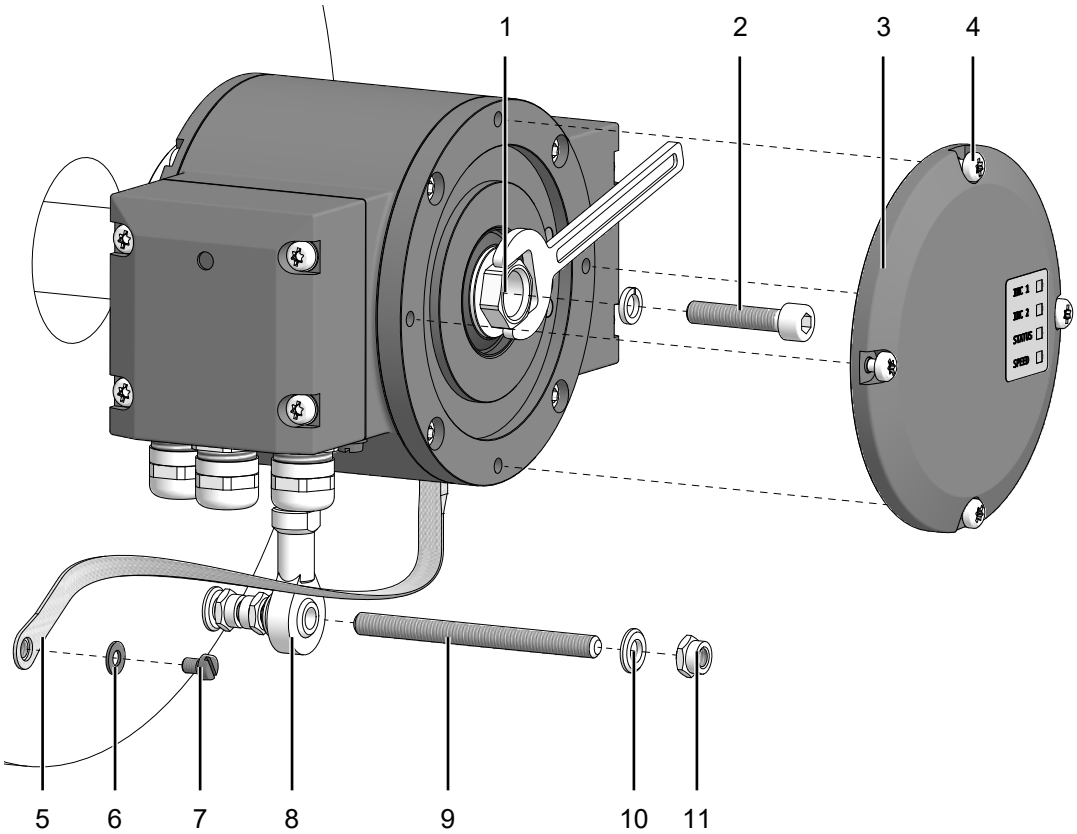

1	Blind hollow shaft or cone shaft with wrench flat SW 17 mm	2	Cheese-head screw M6x30 mm (ISO 4762)
3	Cover	4	Torx/slotted head screw M4x10 mm (DIN 7964)
5	Grounding strap	6	Washer B6.4 for grounding strap (ISO 7090)
7	Cheese-head screw M6x8 mm for grounding strap (ISO 1207)	8	Torque arm
9	Threaded rod M6, variable length ≤ 210 mm	10	Washer B6.4 (ISO 7090)
11	Self-locking nut M6 (ISO 10511)		

Tool

- 5 mm
- 1,6×8 mm
- 10 mm, 17 mm
- 20 mm

Instruction:

a) Disconnect the electrical connection to the encoder using the plug-in terminal boxes and contacts.

b) Remove the cover at rear.

c) Unscrew the cheese-head screw and secure at the hollow shaft using a wrench.

d) Loosen the self-locking nut on the torque arm.

e) Loosen the cheese-head screw at ground strap.

7.1.2 Threaded pin to secure at blind hollow shaft

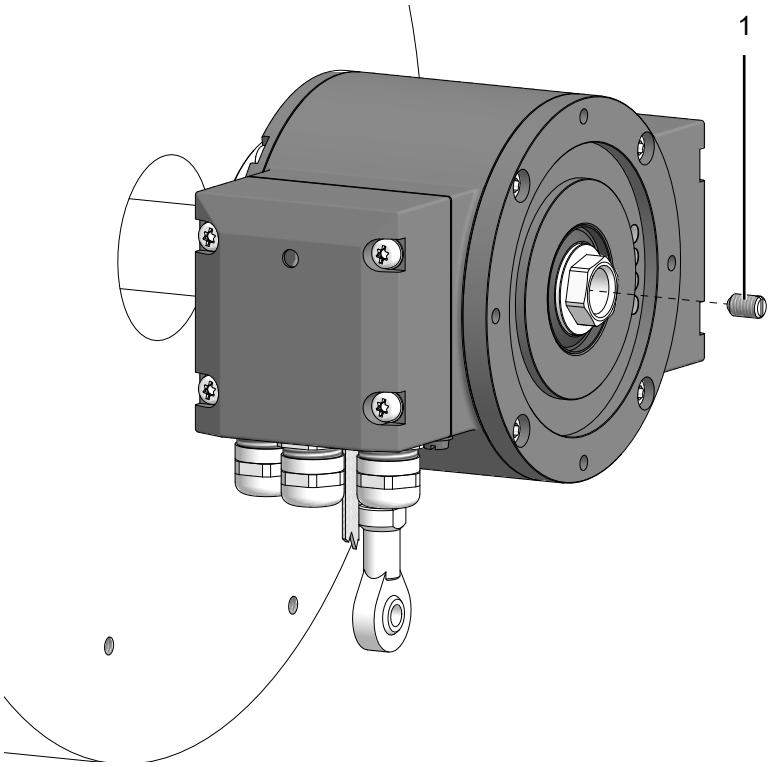

1	Threaded pin M6x10 mm (ISO 7436)

Tool

- 0,8×4 mm

Instruction:

- Flush attachment of the threaded pin will protect the inside thread of the drive shaft.

7.1.3 Detaching the encoder from blind hollow shafts

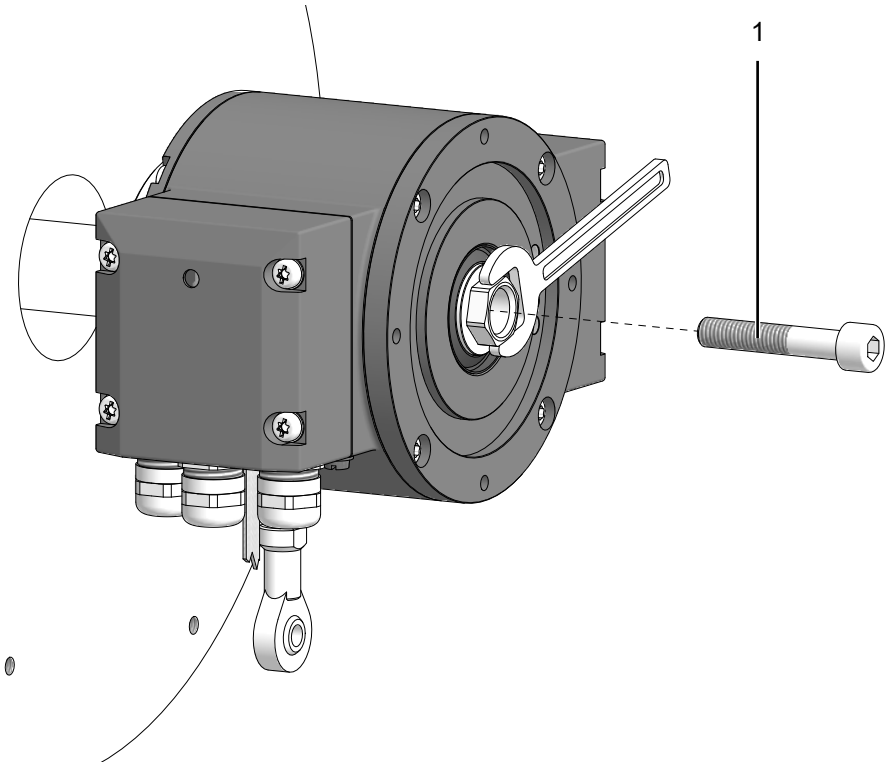

1	Cheese head screw M8x45 mm (ISO 4762)

Werkzeug

- 6 mm
- 17 mm

Instruction:

- Slide encoder off the shaft by loosening the cheese-head screw and support the shaft using a wrench.

Result:

✓ The encoder comes off.

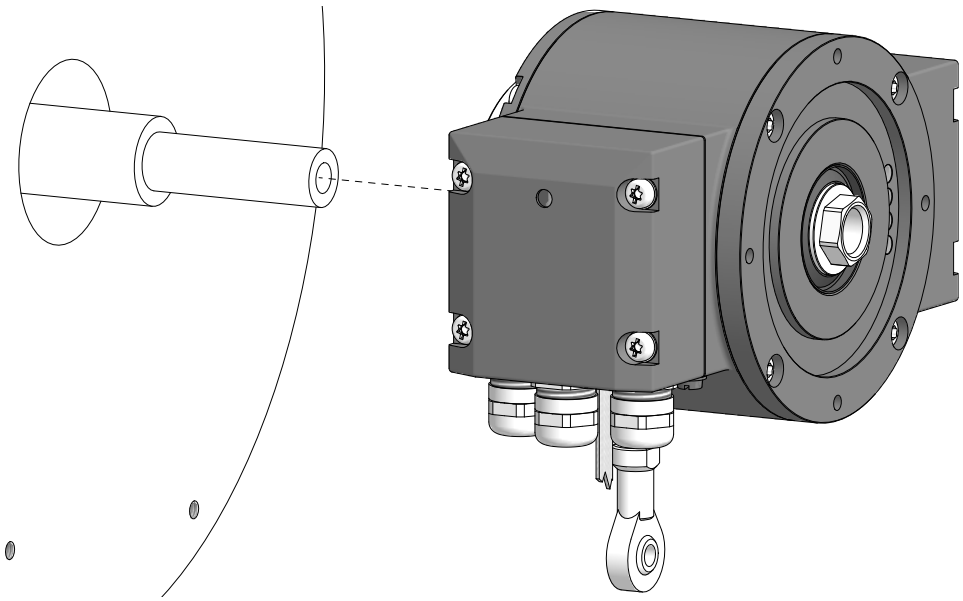

7.2 Detaching the encoder from through-hollow shaft

⚠ DANGER

Burns caused by heat

The device heats up at high torque. There is a risk of getting burned after use.

a) Avoid overheating the device.

b) Wear suitable gloves.

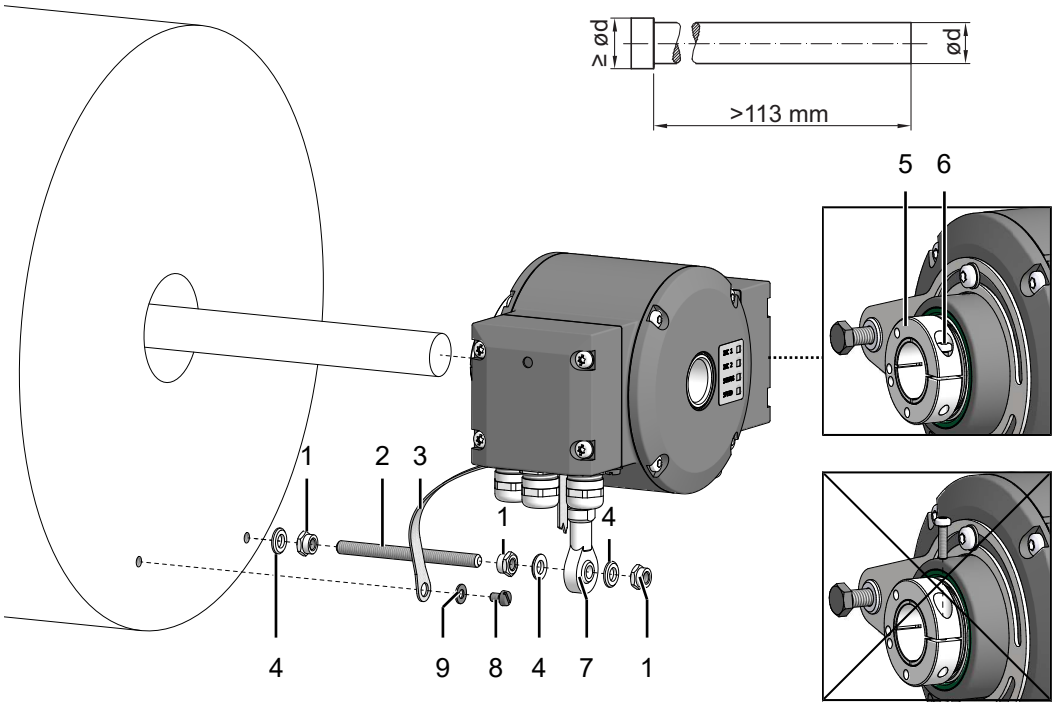

Ill. 14: Detaching the encoder from the through-hollow shaft

1	Self-locking nut M6 (ISO 10511)	2	Threaded rod M6 (variable length ≤ 210 mm)
3	Grounding strap	4	Washer B6.4 (ISO 7090)
5	Through hollow shaft	6	Torx screw M3x12 mm (ISO 7045)
7	Torque arm	8	Cheese-head screw M6x8 mm for grounding strap (ISO 1207)
9	Washer B6.4 for grounding strap (ISO 7090)		

Tool

- 1,6×8 mm
- 10 mm
- 10 mm

Instruction:

a) Loosen the Torx screw at clamping ring. Do not unscrew the screw completely.

b) Loosen the self-locking nut on the torque arm

c) Loosen the cheese-head screw at grounding strap.

d) Slide the encoder off the shaft.

8 Technical data

HMG10 Profibus DP	
Electrical Data	
Voltage supply Ub	10-30 V DC
Short-circuit proof	Yes
Operating current without load	≤ 200 mA
Initializing time	≤ 500 ms after switch-on
Sensing principle	Magnetic
Fieldbus interface	Profibus DPV0/V2
Data rate (fieldbus)	9,6-12000 kBaud
User address	Rotary switch inside the bus terminal box
Steps per turn	8192 / 13 Bit
Number of turns	65536 / 16 Bit
Incremental output	Rectangle TTL/HTL, TTL/RS422
Interference immunity	see data sheet and declaration of conformity
Interference emission	see data sheet and declaration of conformity
Programming interface	RS485 (≤ 600 m) [I]
Programmable parameters	Bus system (see reference at the end of the chapter) Additional output (ppr number) [I] Switch off / on speed [I]
Diagnostic functions	Position and parameter errors
LED status indicator	DUO LED inside the bus terminal box 4 LEDs at rear of the device
Approvals	see data sheet and declaration of conformity
Electrical data (Speed switch)	
Switching accuracy	±2 % (or 1 digit)
Switching outputs	1 output (Open-collector [II] or semiconductor relay [II])
Output switching performance	30 V DC; ≤ 100 mA
Switching delay	≤ 20 ms
Mechanical	
Dimensions (flange)	ø 105 mm
Shaft type	**HMG10-B** ø 16...20 mm (blind hollow shaft) ø 17 mm (cone shaft 1:10) **HMG10-T** ø 16...20 mm (through hollow shaft)
Flange	Torque plate, in any position throughout 360°
Protection class DIN EN 60529	IP66/IP67

HMG10 Profibus DP	
Operating speed	≤6000 rpm
Switching speed range	ns (off) = ±2 ... ±6000 rpm, (HMG10P: factory setting 6000 rpm)
Operating torque typically.	10 Ncm
Rotor torque	950 gcm^2
Maximum permitted shaft load	≤ 450 N axial ≤ 650 N radial
Materials	Housing: aluminium alloy Shaft: stainless steel
Operating temperature	−40 ...+85 °C
Relative humidity	95 % not condensing
Resistance	IEC 60068-2-6 Vibration 30 g, 10-2000 Hz IEC 60068-2-27 Shocks 400 g, 1 ms
Corrosion protection	see data sheet and declaration of conformity
Weight approx.	2,2 kg [II]
Connection	Bus connection terminal box Terminal box [II]

[I] Programmable product variant only

[II] According to product variant

Also see about this

Profibus DP features [▸ 26]

8.1 Blind-hollow shaft dimensions

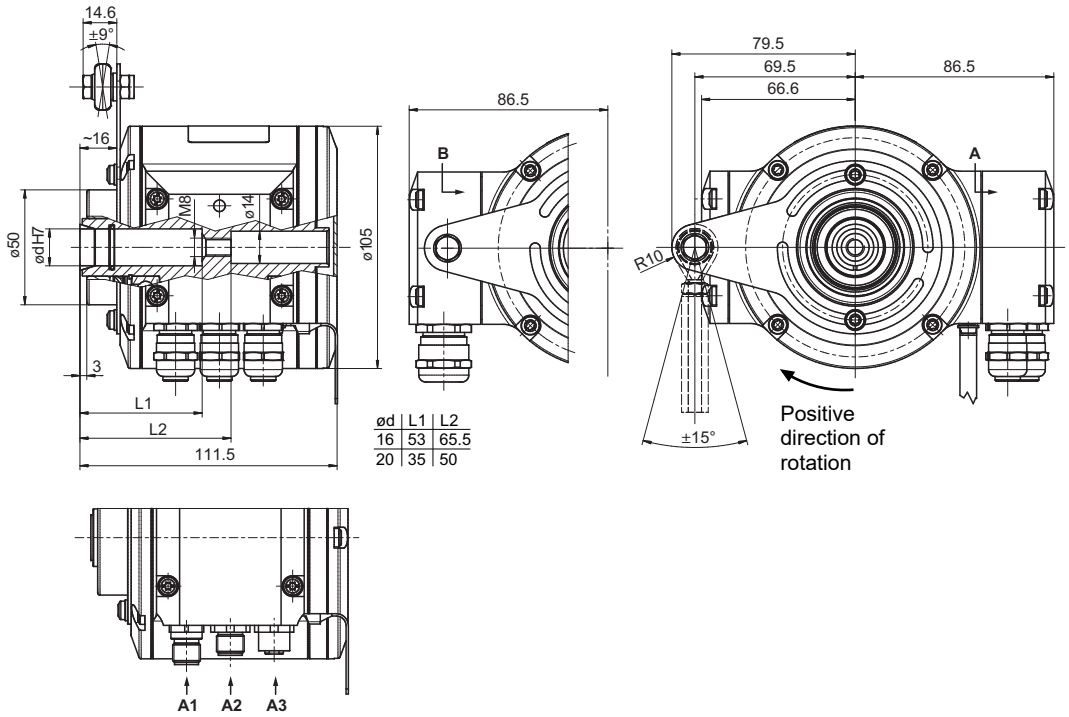

ød	L1	L2
16	53	65.5
20	35	50

Ill. 15: Dimensions of blind hollow shaft in mm (unless specified otherwise)

8.2 Cone shaft dimensions

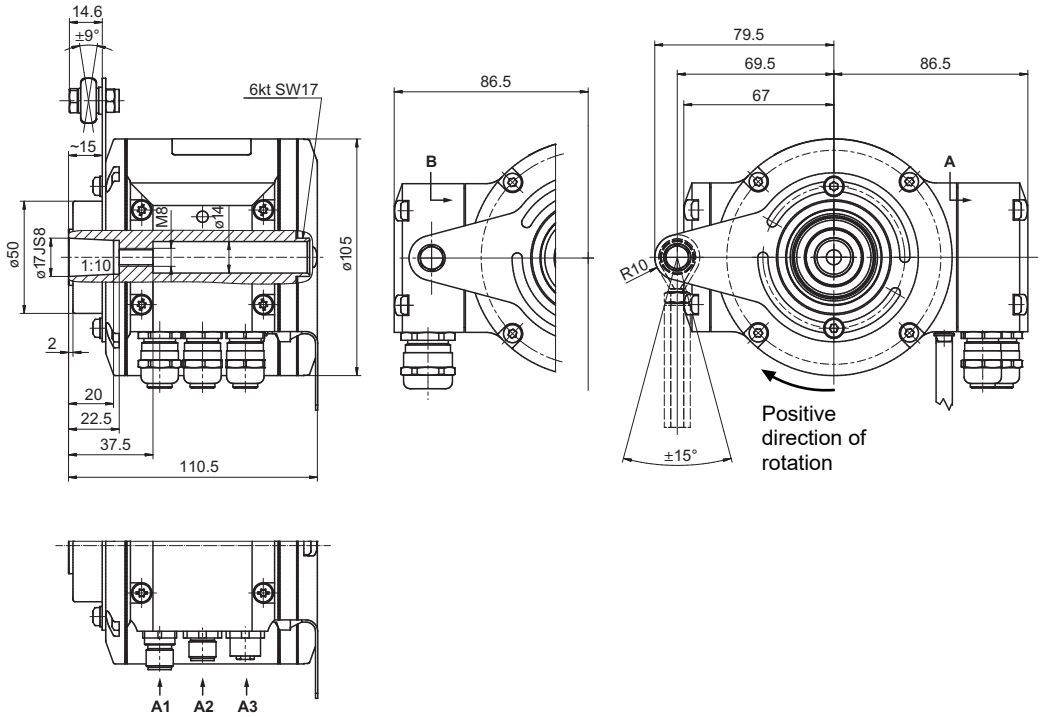

Ill. 16: Cone shaft dimensions (in mm unless specified otherwise)

8.3 Through hollow shaft dimensions

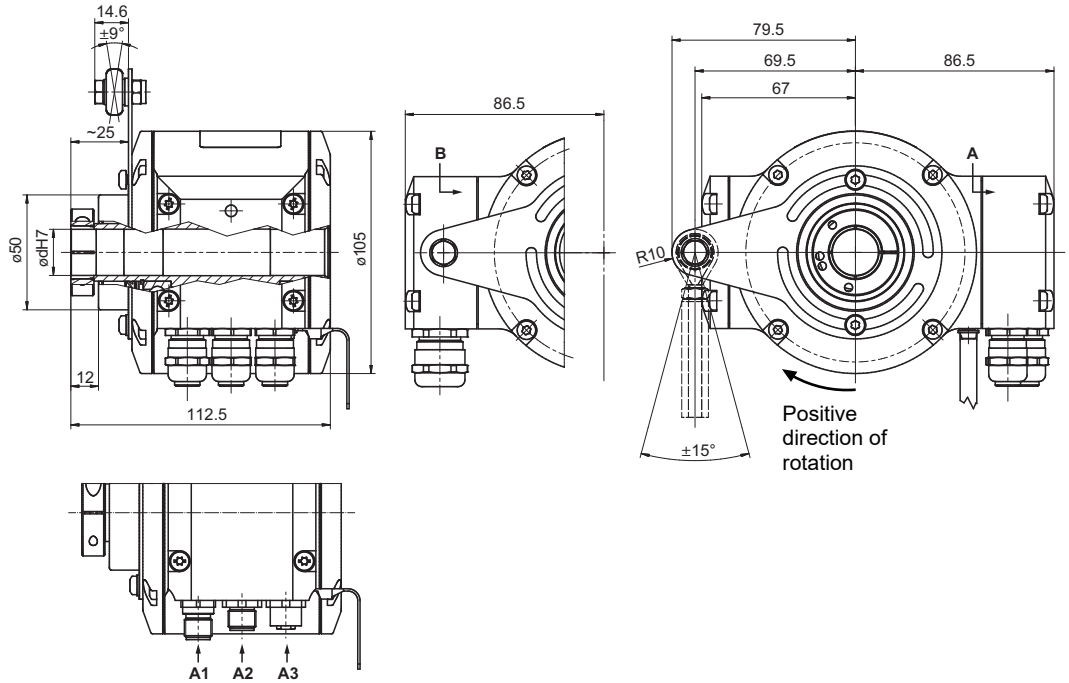

Ill. 17: Dimensions of the through hollow shaft (dimensions in mm unless otherwise specified)

List of illustrations

Ill. 1 Description HMG10 9
Ill. 2 Mounting accessories 10
Ill. 3 Attaching the torque arm to the device 14
Ill. 4 Connecting the supply cable 28
Ill. 5 Connections HMG10 Profibus DP 29
Ill. 6 Mating connector (4-pin, A-coded) 30
Ill. 7 Mating connector (5-pin, B-coded) 30
Ill. 8 Mating connector (5-contact, B-coded) 30
Ill. 9 Terminal box HMG10 Profibus DP 31
Ill. 10 Output signal behavior at positive direction of rotation 32
Ill. 11 Connecting the supply cable 35
Ill. 12 Pin assignment 36
Ill. 13 Z-PA.SDL.1 WLAN adapter (ordering ref.: 11190106) 37
Ill. 14 Detaching the encoder from the through-hollow shaft 42
Ill. 15 Dimensions of blind hollow shaft in mm (unless specified otherwise) 45
Ill. 16 Cone shaft dimensions (in mm unless specified otherwise) 45
Ill. 17 Dimensions of the through hollow shaft (dimensions in mm unless otherwise specified) 46

Baumer
Passion for Sensors

www.baumer.com/worldwide