Baumer
Passion for Sensors

Sine encoders

HOGS 100 S

SIL2 approval

Blind hollow shaft ø16 mm or cone shaft ø17 mm (1:10) / 1024...5000 sinewave cycles per turn

Overview

- For safety-relevant applications according SIL2
- Blind hollow shaft ø16 mm or cone shaft ø17 mm (1:10)
- Up to 5000 sinewaves cycles per turn
- Low harmonic content (patented LowHarmonics technology)
- Top-quality SinCos output-signals
- Protection against inductive shaft current
- Large terminal box, turn by 180° or axial terminal cover

Low Harmonics®

HÜBNER BERLIN
A Baumer Brand

Technical data

Technical data - electrical ratings

Voltage supply	5 VDC ±10 % 7...30 VDC
Consumption w/o load	≤90 mA
Sinewave cycles per revolution	1024 … 5000
Phase shift	90 °
Reference signal	Zero pulse, width 90°
Sensing method	Optical
Output signals	K1, K2, K0 + inverted
Output stages	SinCos 1 Vpp
Difference of SinCos amplitude	≤20 mV
Harmonics typ.	-50 dB
DC offset	≤20 mV
Bandwidth	250 kHz (-3 dB)
Function safety	SS1, SS2, SOS, SLS, SDI, SLI according to EN 61800-5-2:2007
Safety operating figures	Service life: 20 a PFH: 1,75 10^-7 1/h
Interference immunity	EN 61000-6-2 EN 61326-3-1
Emitted interference	EN 61000-6-3
EMC requirements	EN 61800-3
Approval	CE PL d / SIL2 approval according to EN ISO 13849-1 and EN 62061 UL approval / E217823

Technical data - mechanical design

Size (flange)	ø105 mm
Shaft type	ø16 mm (blind hollow shaft) ø17 mm (cone shaft 1:10)
Admitted shaft load	≤250 N axial ≤400 N radial
Motor shaft tolerance	0.2 mm axial (≤6000 rpm) 0.03 mm axial (>6000 rpm)
Protection EN 60529	IP 66
Operating speed	≤10000 rpm (mechanical)
Operating torque typ.	6 Ncm
Rotor moment of inertia	180 gcm²
Material	Housing: aluminium die-cast Shaft: stainless steel
Operating temperature	-20...+85 °C
Resistance	IEC 60068-2-6 Vibration 10 g, 10-2000 Hz IEC 60068-2-27 Shock 100 g, 6 ms
Corrosion protection	IEC 60068-2-52 Salt mist for ambient conditions C4 according to ISO 12944-2
Explosion protection	II 3 G Ex ec IIC T4 Gc (gas) II 3 D Ex tc IIIC T135°C Dc (dust) (only with option ATEX)
Connection	Terminal box Terminal cover
Weight approx.	1.8 kg

2022-04-11 The product features and technical data specified do not express or imply any warranty. Technical modifications subject to change.

HOGS 100 S

SIL2 approval

Blind hollow shaft ø16 mm or cone shaft ø17 mm (1:10) / 1024...5000 sinewave cycles per turn

Terminal assignment

View A *(see dimension)*
Connecting terminal terminal box, radial

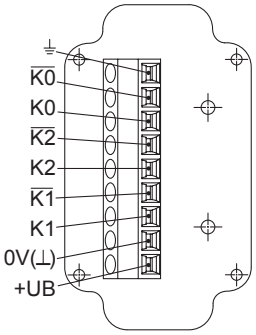

View B *(see dimension)*
Connecting terminal terminal cover, axial

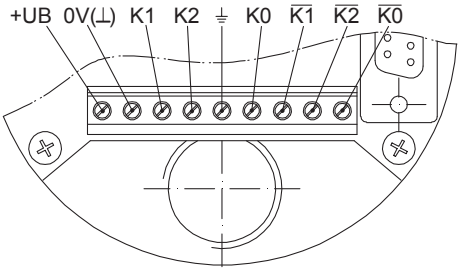

Terminal significance

+UB	Voltage supply
0V (⊥)	Ground
⏚	Earth ground (housing)
K1	Output signal channel 1
$\overline{K1}$	Output signal channel 1 inverted
K2	Output signal channel 2 (offset by 90° to channel 1)
$\overline{K2}$	Output signal channel 2 inverted
K0	Zero pulse (reference signal)
$\overline{K0}$	Zero pulse inverted

Output signals

SinCos
At positive rotating direction *(see dimension)*

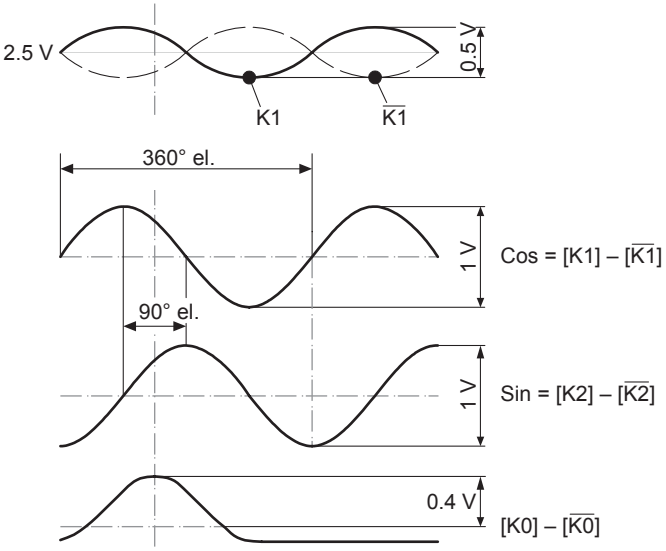

The product features and technical data specified do not express or imply any warranty. Technical modifications subject to change.
2022-04-11

HOGS 100 S

SIL2 approval

Blind hollow shaft ø16 mm or cone shaft ø17 mm (1:10) / 1024...5000 sinewave cycles per turn

Dimensions

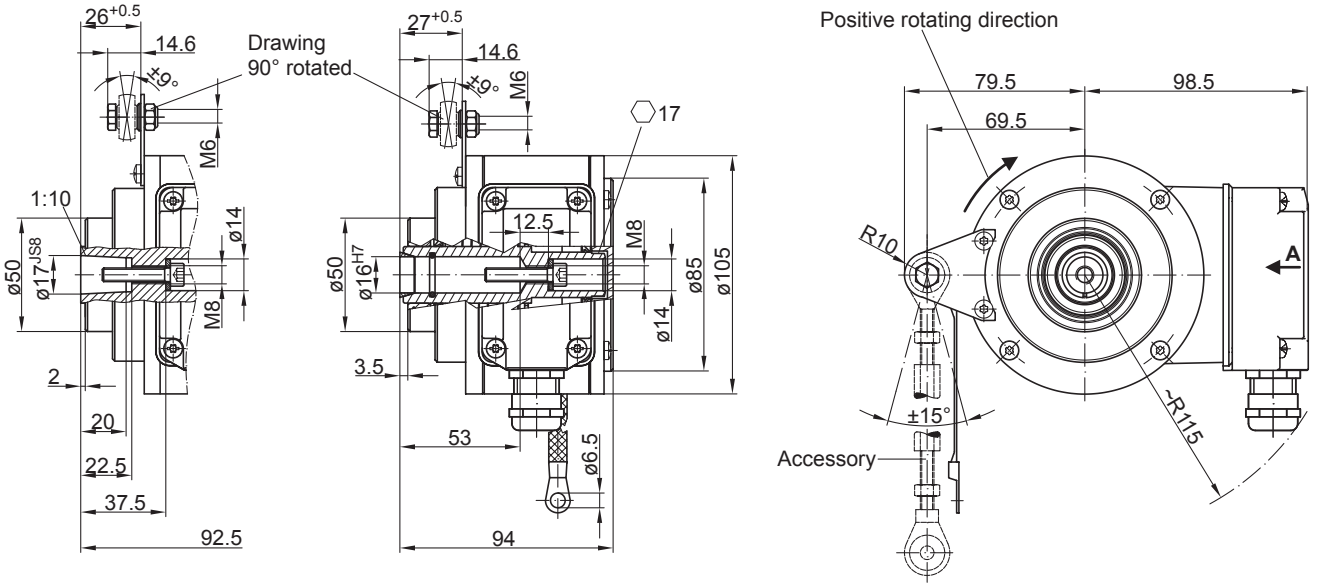

Version with radial terminal box

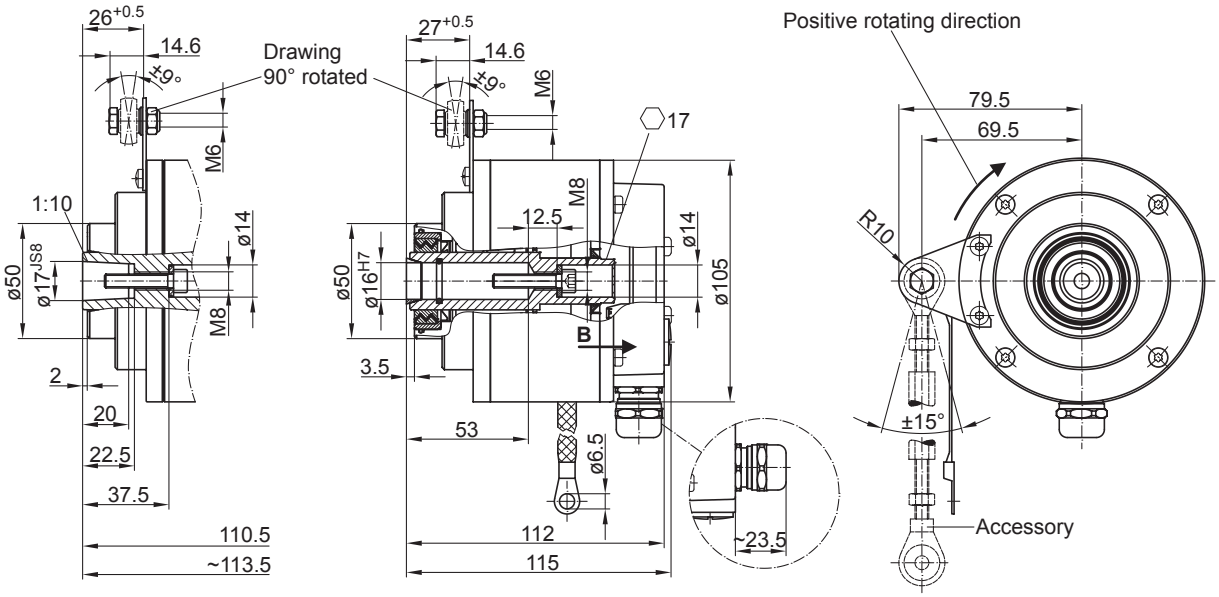

Version with axial terminal cover

2022-04-11 The product features and technical data specified do not express or imply any warranty. Technical modifications subject to change.

HOGS 100 S

SIL2 approval

Blind hollow shaft ø16 mm or cone shaft ø17 mm (1:10) / 1024...5000 sinewave cycles per turn

Ordering reference

	HOGS100S	-	B	##	6	.	#	#	#	.	####	.	1
Product													
Sine encoder	HOGS100S												
Shaft type													
Blind hollow/cone shaft			B										
Sealing system													
Dust protection = LR				6									
Damp protection = SR				7									
Protection													
IP 66					6								
Shaft diameter													
ø16 mm, central screw							6						
ø17 mm cone 1:10, central screw							7						
Connection													
Terminal cover, axial								1					
1x terminal box with cable gland M20, radial								2					
Voltage supply / output stages													
7...30 VDC, SinCos (1 Vpp), 6 channel									5				
5 VDC ±10 %, SinCos (1 Vpp), 6 channel									6				
Sinewave cycles													
1024											1024		
2048											2048		
5000											5000		
Operating temperature													
-20...+85 °C													1

Accessories

Mounting accessories	
11043628	Torque arm M6, length 67...70 mm
11004078	Torque arm M6, length 120...130 mm (≥71 mm)
11002915	Torque arm M6, length 425...460 mm (≥131 mm)
11054917	Torque arm M6 insulated, length 67...70 mm
11072795	Torque arm M6 insulated, length 120...130 mm (≥71 mm)
11082677	Torque arm M6 insulated, length 425...460 mm (≥131 mm)

Diagnostic accessories	
11075858	Analyzer for encoders HENQ 1100
11075880	Analyzer for encoders HENQ 1100 B

2022-04-11 The product features and technical data specified do not express or imply any warranty. Technical modifications subject to change.