Baumer
Passion for Sensors

Encoders without bearings - incremental

ITD49H00 - Rectangular signal

Through hollow shaft ø8 to ø28 mm

64...2048 pulses per revolution

Overview

- Bearingless magnetic encoder
- Max. 2048 pulses per revolution
- Output circuits: HTL or TTL
- Fast, easy and space saving installation
- Maintenance-free
- High accuracy - error max. ±0.3°
- Rotation speed max. 18000 rpm
- High resistance to dirt and vibrations
- Magnetic rotor included in delivery

Technical data

Technical data - electrical ratings	
Voltage supply	5 VDC ±5 % 8...26 VDC
Reverse polarity protection	Yes
Short-circuit proof	Yes
Consumption w/o load	≤50 mA
Pulses per revolution	64 … 2048
Interpolation	1-fold (single) 2-fold 4-fold 8-fold 16-fold 32-fold
Output signals	A 90° B + inverted A 90° B, N + inverted
Output stages	TTL linedriver (short-circuit proof) HTL push-pull (short-circuit proof)
Output current	≤30 mA
Output frequency	≤300 kHz (TTL) ≤160 kHz (HTL)

Technical data - electrical ratings	
System accuracy	±0.3°
Interference immunity	EN 61000-6-2
Emitted interference	EN 61000-6-3
Technical data - mechanical design	
Shaft type	ø8...28 mm (through hollow shaft)
Dimensions W x H x L	12 x 16 x 48 mm
Protection EN 60529	IP 67 (relating to sealed electronics)
Operating speed	≤18000 rpm
Working distance	0.2 … 0.5 mm (radial), optimal 0,3 mm
Axial offset	±0.5 mm
Material	Housing: plastic Shaft: stainless steel 1.4104
Operating temperature	-40...+100 °C (fixed cable)
Resistance	EN 60068-2-6 Vibration 10 g, 55-2000 Hz EN 60068-2-27 Shock 100 g, 11 ms
Weight approx.	250 g
Connection	Cable 1 m

Optional

- Cable with connector
- Redundant sensing

2022-08-17 The product features and technical data specified do not express or imply any warranty. Technical modifications subject to change.

ITD49H00 - Rectangular signal

Through hollow shaft ø8 to ø28 mm

64...2048 pulses per revolution

Terminal assignment

With BI-signals, cable [4x2x0,08 mm2]

Core colour	Assignment
green	Track A
yellow	Track A inv.
grey	Track B
pink	Track B inv.
red	UB
blue	GND
transparent	Shield/Housing

With NI-signals, cable [4x2x0,08 mm2]

Core colour	Assignment
green	Track A
yellow	Track A inv.
grey	Track B
pink	Track B inv.
brown	Track N
white	Track N inv.
red	UB
blue	GND
transparent	Shield/Housing

Output signals

Clockwise rotation when looking at the mounting side.

BI-Output signals

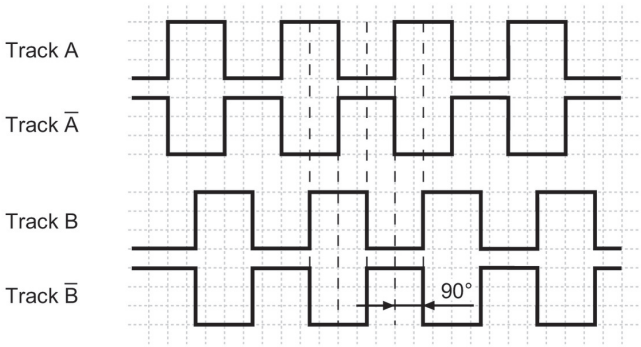

NI-Output signals

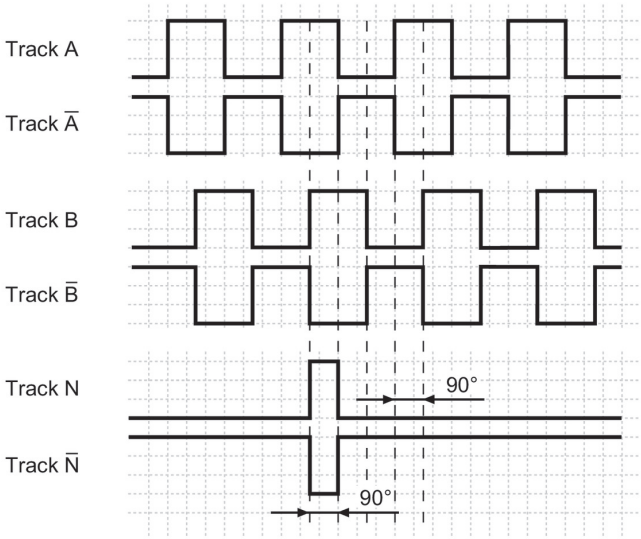

Trigger level

Outputs	**Linedriver**
Output level High	≥2,5 V
Output level Low	≤0,5 V
Load	≤30 mA

Outputs	**Push-pull** short-circuit proof
Output level High	≥UB -3 V
Output level Low	≤1,5 V
Load	≤30 mA

2022-08-17 The product features and technical data specified do not express or imply any warranty. Technical modifications subject to change.

ITD49H00 - Rectangular signal

Through hollow shaft ø8 to ø28 mm

64...2048 pulses per revolution

Dimensions

mounting side (proposition)

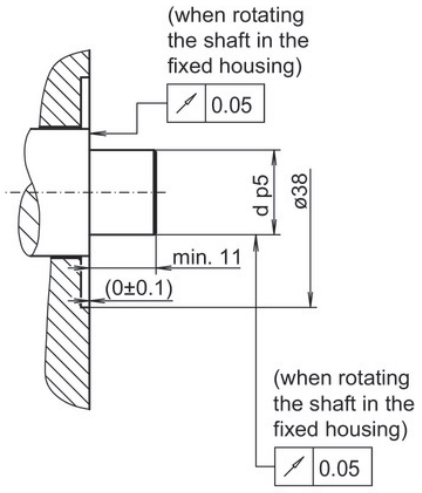

dimension drawing (optimal mounting)

d = ø9 mm, ø9.525 mm, ø10 mm, ø12 mm, ø12.7 mm, ø14 mm, ø15 mm, ø15.875 mm, ø19 mm, ø25 mm, ø25.4 mm, ø28 mm.
Please specify the desired bore diameter in your order.

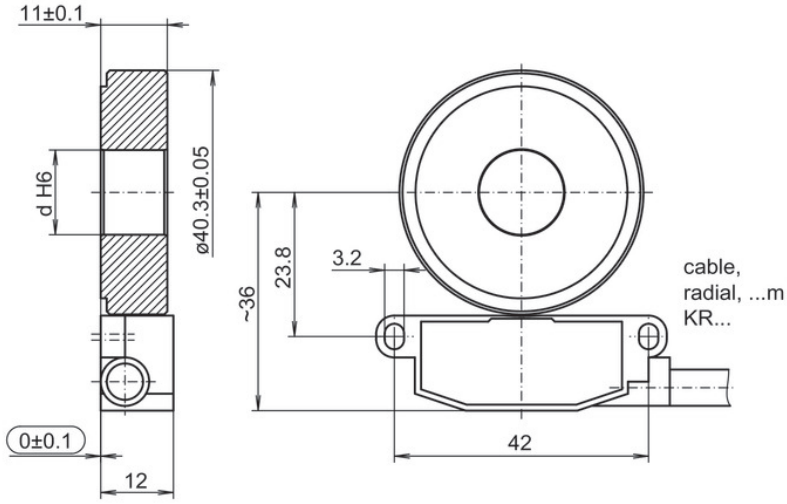

d = ø8 mm
Please specify the desired bore diameter in your order.

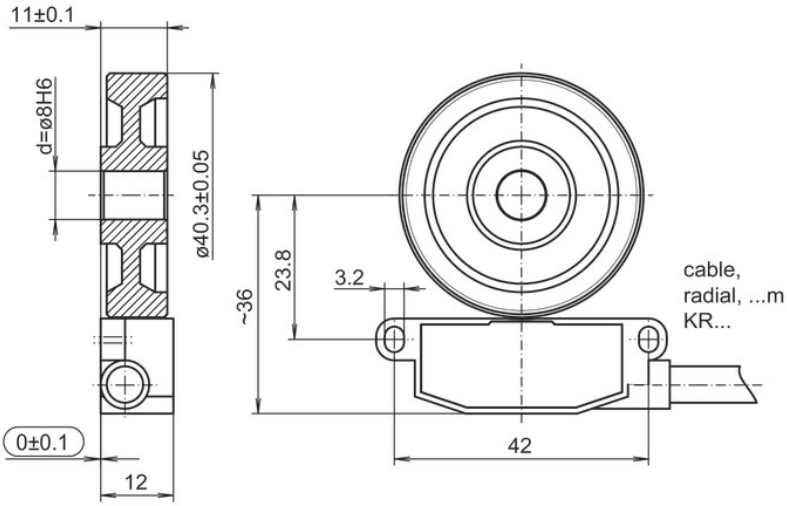

Mounting type	Shaft tolerance	Requirement
Shrink fitting	d p5	Maximum heating of the pole wheel $T_{(max)}$=100 °C
Adhesive mounting	d g6	Please observe the manufacturer's instructions for the adhesive mounting with respect to adhesives and adhesive air gap. Recommendation: Adhesive Loctite 3504

Installation note:
The system, consisting of sensor and rotor, form a matched pair. They may not be exchanged individually. The sensor should be mounted on an electrically conductive surface on potting side.

2022-08-17 The product features and technical data specified do not express or imply any warranty. Technical modifications subject to change.

ITD49H00 - Rectangular signal

Through hollow shaft ø8 to ø28 mm

64...2048 pulses per revolution

Dimensions

Mounting tolerances, operating tolerances

Permitted change of position sensor to rotor during mounting and operation:

Axial offset:

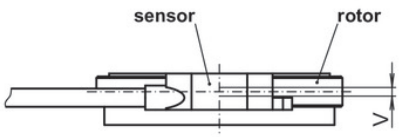

V = ±0.5 mm, optimal 0.1 mm

Working distance:

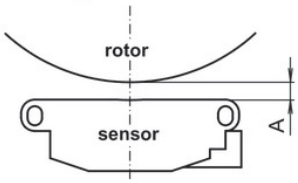

A = 0.2...0.5 mm,
optimal 0.3 mm

Use the distance band as s
mounting tool for optimal gap (0.3 mm)
between sensor and rotor.

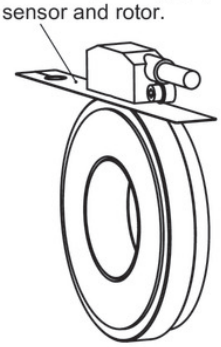

Mounting position

Mounting position (1-1) sensor to rotor should not be altered!

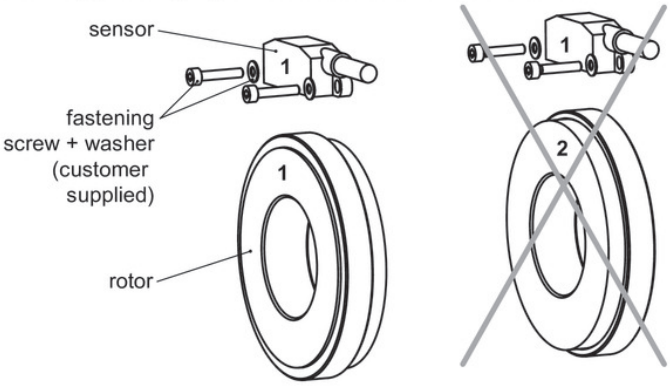

The product features and technical data specified do not express or imply any warranty. Technical modifications subject to change.
2022-08-17

ITD49H00 - Rectangular signal

Through hollow shaft ø8 to ø28 mm

64...2048 pulses per revolution

Ordering reference

	ITD49H00	#####	#	####	KR1	E	######	IP	67
Product									
	ITD49H00								
Pulse number									
64(1)		64							
128(1)		128							
256		256							
512		512							
1024		1024							
2048		2048							
Voltage supply									
UB= 5 VDC ±5% / TTL level, linedriver			T						
UB= 8...26 VDC / HTL level, push-pull			H						
Output signal									
A, A inv, B, B inv				BI					
A, A inv, B, B inv, N, N inv				NI					
Connection									
Cable radial, 1.00 m					KR1				
Operating temperature									
-40...+100 °C (fixed cable)						E			
Magnetic wheel H00									
Ø8 mm, for adhesive or heat-shrink mounting							08		
Ø9 mm, for adhesive or heat-shrink mounting							09		
Ø10 mm, for adhesive or heat-shrink mounting							10		
Ø12 mm, for adhesive or heat-shrink mounting							12		
Ø14 mm, for adhesive or heat-shrink mounting							14		
Ø15 mm, for adhesive or heat-shrink mounting							15		
Ø19 mm, for adhesive or heat-shrink mounting							19		
Ø25 mm, for adhesive or heat-shrink mounting							25		
Ø28 mm, for adhesive or heat-shrink mounting							28		
IP								IP	
Protection class									
IP67 (relating to sealed electronics)									67

(1) Featured pulse numbers available as BI output signals.
Other diameters on request.

2022-08-17 The product features and technical data specified do not express or imply any warranty. Technical modifications subject to change.