Mounting kit 046

Stator coupling, 2-armed, bolt circle ø63 mm, mounting M3

Article number: 11100198

Overview

- For high-dynamic applications.

Technical data

Technical data - mechanical design

Weight approx.	9 g

Description

Standard stator coupling mount with the screws on the encoder. Push encoder onto the drive shaft and mount torque support onto the client side. Fastening clamping ring with clamping ring screw.

Scope of delivery

Standard stator coupling, four screws M3 x 6 (DIN 7985 - TX10)

Suitable for

EIL580-B, EIL580-T, EIL580-B - Option 6301, EIL580-T - Option 6301, EIL580P-B, EIL580P-T, ExEIL580-B, ExEIL580-T

Dimensions

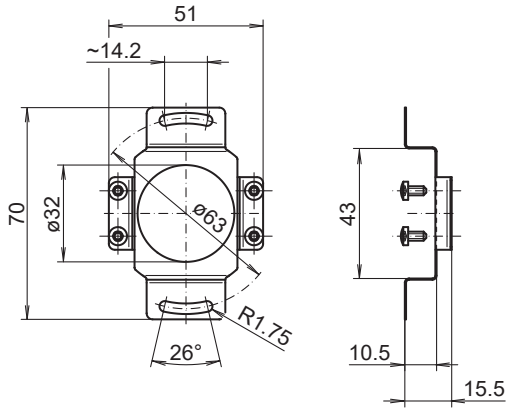

Assembly drawing

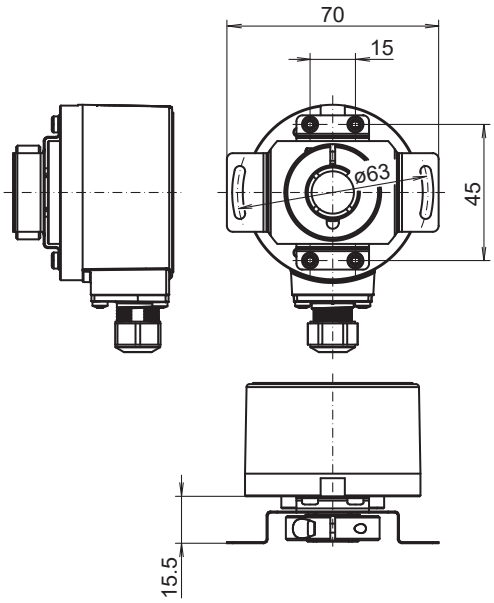

2022-10-27 The product features and technical data specified do not express or imply any warranty. Technical modifications subject to change.