Mounting accessories

Mounting rod with mounting plate holder 300 mm

Article number: 11707686

Overview

- Material: Aluminium
- Part of an assembly
- Different lengths available

Dimension drawing

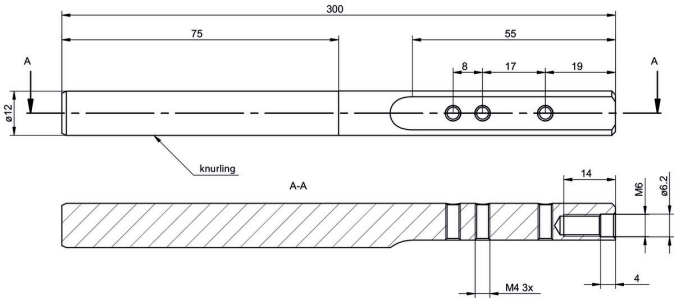

ZADAP

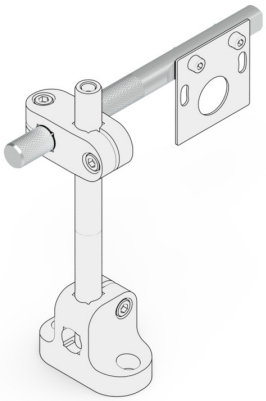

Assembly drawing

2023-05-08 The product features and technical data specified do not express or imply any warranty. Technical modifications subject to change.