Baumer
Passion for Sensors

SmartReflect Light barriers

O300H.SL-GW1J.PVNV

SmartReflect Light barriers - hygiene

Article number: 11179008

Overview

- light barrier
- 30 … 250 mm
- pulsed red laser diode
- push-pull
- Teach-in and IO-Link
- flylead connector M8, L=200 mm
- -10 … 60 °C
- IP 68/69K & proTect+

Picture similar

Technical data

General data	
Type	Light barrier
Special type	Hygienic design
Version	Standard object detection
Light source	Pulsed red laser diode
Background position Sde	30 … 250 mm
Scanning range Sa	90% ... 85% Sde
Repeat accuracy	< 0,1 mm at 100 mm
Power on indication	LED green
Light indicator	LED yellow
Sensing distance adjustment	Teach-in and IO-Link
Laser class	1
Distance to focus	400 mm
Wave length	656 nm
Suppression of reciprocal influence	Yes
Alignment optical axis	< 2°
Approvals/certificates	Ecolab
Electrical data	
Response time / release time	< 0,25 ms

Electrical data	
Voltage supply range +Vs	11 … 30 VDC
Current consumption max. (no load)	30 mA
Current consumption typ.	25 mA
Voltage drop Vd	< 2,5 VDC
Output function	Light / dark operate
Output circuit	Push-pull
Output current	< 100 mA
Short circuit protection	Yes
Reverse polarity protection	Yes
Mechanical data	
Width / diameter	16,5 mm
Height / length	34,6 mm
Depth	28,7 mm
Type	Rectangular
Housing material	Stainless steel 1.4404 (V4A)
Front (optics)	PMMA
Connection types	Flylead connector M8, L=200 mm
Ambient conditions	
Operating temperature	-10 … +60 °C
Protection class	IP 68/69K & proTect+

2020-12-16 The product features and technical data specified do not express or imply any warranty. Technical modifications subject to change.

O300H.SL-GW1J.PVNV

SmartReflect Light barriers - hygiene

Article number: 11179008

Remarks

- Magnetic Teach
- IO-Link: V1.1, filter functions, qTeach lock adjustable

Dimension drawing

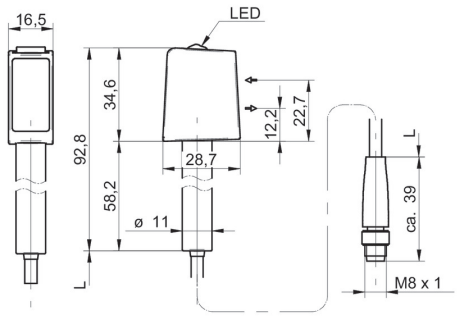

Beam characteristic (typically)

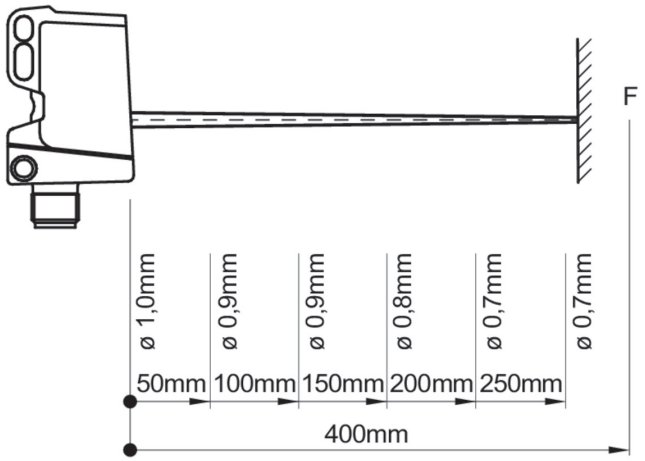

Connection diagram

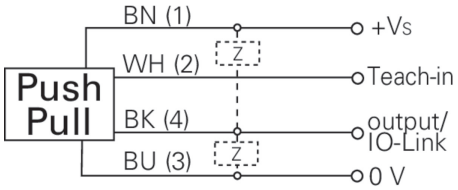

Laser warning

CLASS 1 LASER PRODUCT

IEC 60825-1/2014
Complies with 21 CFR 1040.10 and 1040.11 except for conformance with IEC 60825-1 Ed. 3., as described in Laser Notice No. 56, dated May 8, 2019

Pin assignment

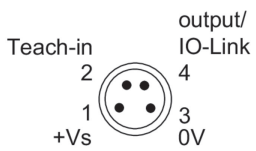

2020-12-16 The product features and technical data specified do not express or imply any warranty. Technical modifications subject to change.