Baumer
Passion for Sensors

HÜBNER BERLIN
A Baumer Brand

microGen
Energy Harvesting

Operating Manual

PMG10 & PMG10P EtherNet/IP

Absolute Encoder

EN-US

V1 | 3/15/2022 | 11173990

List of contents

1 About this document ... 4

1.1 Purpose ... 4

1.2 Warnings in this manual ... 4

1.3 Labels in this manual ... 4

1.4 Disclaimer ... 4

1.5 Scope of delivery ... 5

1.6 Name plate ... 5

1.7 Maintenance and service life ... 6

1.8 Approvals and warranty ... 6

1.9 Temperature range for operation and storage ... 6

2 General information ... 7

3 Transport and storage ... 8

3.1 Transport ... 8

3.2 Delivery inspection ... 8

3.3 Storage ... 8

4 Description ... 9

4.1 Rotary encoder ... 9

4.2 Mounting accessories (not included) ... 10

4.3 Required tools ... 10

5 Installation ... 11

5.1 Mounting with EURO flange B10 ... 11

5.1.1 Attach coupling onto encoder shaft ... 11

5.1.2 Mounting encoder onto drive shaft ... 12

5.2 Mounting with base B3 ... 14

5.2.1 Attach coupling onto encoder shaft ... 14

5.2.2 Mounting encoder onto drive shaft ... 15

5.3 Maximum permitted tolerances for mounting errors when using the Baumer Hübner K 35 spring washer ... 17

5.4 Notes when using a claw coupling (e.g. ROTEX®) ... 17

6 Electrical installation ... 19

6.1 EtherNet/IP ... 20

6.1.1 Features EtherNet/IP ... 20

6.1.2 Pin assignment EtherNet/IP ... 20

6.1.2.1 Mating connector (4-pin, A-coded) ... 21

6.1.2.2 Mating connector (4-contact D-coded) ... 21

6.1.3 View in bus junction box ... 21

6.1.4 Set IP address ... 21

6.2 Terminal box ... 22

6.2.1 Pin assignment at terminal box ... 22

6.2.2 Output signals additional incremental output (optional) ... 22
6.2.3 Switching level additional output incremental (optional) ... 23
6.2.4 Programming interface (only for programmable variant) ... 23
6.2.5 LED activity indicator ... 23
6.2.6 Output switching behavior Speed switch (optional) ... 24
6.2.7 Connecting the supply cable ... 24
6.2.8 Terminals assignment ... 26
6.3 Z-PA.SDL.1 WLAN adapter: Programming device for HMG10P/PMG10P ... 27
7 Disassembly ... 28
7.1 Uninstall when using EURO flange B10 ... 29
7.1.1 Uninstall encoder from drive shaft ... 29
7.2 Uninstall with base B3 ... 31
7.2.1 Uninstall encoder from drive shaft ... 31
8 Technical data ... 33
8.1 Solid shaft encoder dimensions with EURO flange B10 ... 34
8.2 Solid shaft encoder dimensions with housing base B3 ... 35

1 About this document

1.1 Purpose

This operating manual (subsequently referred to as *manual*) allows the safe and efficient handling of the product .

The manual does not provide instructions on operating the machine in which the product is integrated. Information on this is found in the operating manual of the machine.

The manual is a constituent part of the product. It must be kept in the immediate vicinity of the product and must be accessible to personnel at all times.

Personnel must have carefully read and understood this manual before beginning any work. The basic prerequisite for safe working is compliance with all safety instructions and handling instructions given in this manual.

In addition, the local occupational health and safety regulations and general safety regulations apply.

The illustrations in this manual are examples only. Deviations are at the discretion of Baumer at all times.

1.2 Warnings in this manual

Warnings draw attention to potential personal injury or material damage. The warnings in this manual indicate different hazard levels:

Symbol	Warning term	Explanation
	DANGER	Indicates an imminent potential danger with high risk of death or serious personal injury if not being avoided.
	WARNING	Indicates potential danger with medium risk of death or (serious) personal injury if not being avoided.
	CAUTION	Indicates a danger with low risk, which could lead to light or medium injury if not avoided.
	NOTE	Indicates a warning of material damage.
	INFO	Indicates practical information and tips that enable optimal use of the devices.

1.3 Labels in this manual

Identifier	Use	Example
Dialog element	Indicates dialog elements.	Click the ***OK*** button.
Unique name	Indicates the names of products, files, etc.	*Internet Explorer* is not supported in any version.
`Code`	Indicates entries.	Enter the following IP address: `192.168.0.250`

1.4 Disclaimer

The manufacturer is not liable for personal injury and/or property damage resulting from improper use of the device.

1.5 Scope of delivery

The scope of delivery includes:

- 1 x rotary encoder
- 1 x instruction manual
- 1 x General information leaflet

In addition, you can find the following information, among other things, in digital format at www.baumer.com:

- Data sheet
- Manual EtherNet/IP
- 3D CAD drawing
- XML file for the EtherNet/IP connection
- Certificates (e.g. EU declaration of conformity)

Also see about this

Rotary encoder [▸ 9]
Mounting accessories (not included) [▸ 10]

1.6 Name plate

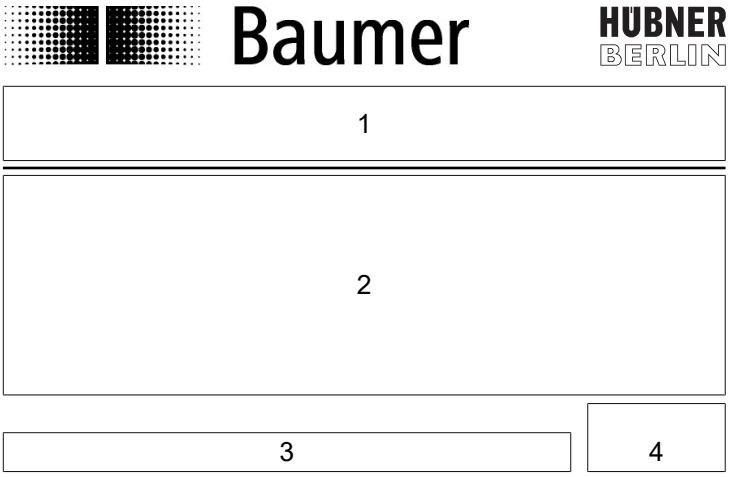

1	Product name, product code, material number	2	Serial number, technical data, MAC address
3	Baumer Website	4	Labels

1.7 Maintenance and service life

The device may only be opened for assembly and maintenance work as described in the present instruction manual. Any repair or maintenance work requiring fully opening the device must be carried out by the manufacturer only.

Do not perform any modifications at the device.

The expected service life of the device depends on the ball bearings featuring permanent lubrication.

For any queries or subsequent deliveries refer to the product data specified on the device label, in particular type and serial number.

1.8 Approvals and warranty

Declaration of conformity according to the prevailing country-specific directives.

We grant a 2-year warranty in line with the conditions of the German Electrical and Electronic Manufacturers' Association (ZVEI).

INFO

warranty seal

Any breaking of the seal provided at the device will result in loss of warranty.

1.9 Temperature range for operation and storage

The storage temperature of the device ranges from -15 ... +70 °C

The device operating temperature range ranges between -40 ... +85 °C, measured at housing.

2 General information

Intended use

This product is a precision device and serves the detection of items, objects, or physical measurement variables and the preparation or provision of measured values as electric variables for the higher-level system.

Unless specifically labeled, this product may not be used in explosive environments.

Commissioning

Assembly, installation, and calibration of this product may only be performed by a specialist.

Installation

Only use the fasteners and fastener accessories intended for this product for installation. Outputs not in use must not be wired. Unused wires of cable outputs must be insulated. Do not go below the permissible cable bending radii. Disconnect the system from power before the product is electrically connected. Use shielded cables to prevent electro-magnetic interference. If the customer assembles plug connections on shielded cables, then EMC-version plug connections should be used and the cable shield must be connected to the plug housing across a large surface area.

Disposal (environmental protection)

Used electrical and electronic devices may not be disposed of in household waste. The product contains valuable raw materials that can be recycled. Therefore dispose of this product at the appropriate collection point. For additional information visit www.baumer.com.

3 Transport and storage

3.1 Transport

NOTICE

Material damage due to improper transport.

a) Ensure maximum diligence when unloading the delivered packages as well as when transporting them inside the company.

b) Note the information and symbols on the packaging.

c) Only remove packaging immediately before mounting.

3.2 Delivery inspection

Upon receipt immediately inspect the delivery for completeness and transport damage.

Claim any defect as soon as it is detected. Damages can only be claimed within the applicable claims deadlines.

In case of externally visible transport damage, proceed as follows:

Instruction:

a) Do not accept the delivery or only with reservations.

b) Note the scope of the damage on the transport documents or the delivery slip of the carrier.

c) Initiate the claim.

3.3 Storage

Store the product at the following conditions:

- Use the original packaging for storage.
- Do not store outdoors.
- Store dry and free from dust.
- Do not expose to aggressive media.
- Keep away from the sun.
- Avoid mechanical agitation.
- Storage temperature: -15 ... +70 °C..
- When storing for longer than 3 months, regularly check the general state of all parts and the packaging.

4 Description

4.1 Rotary encoder

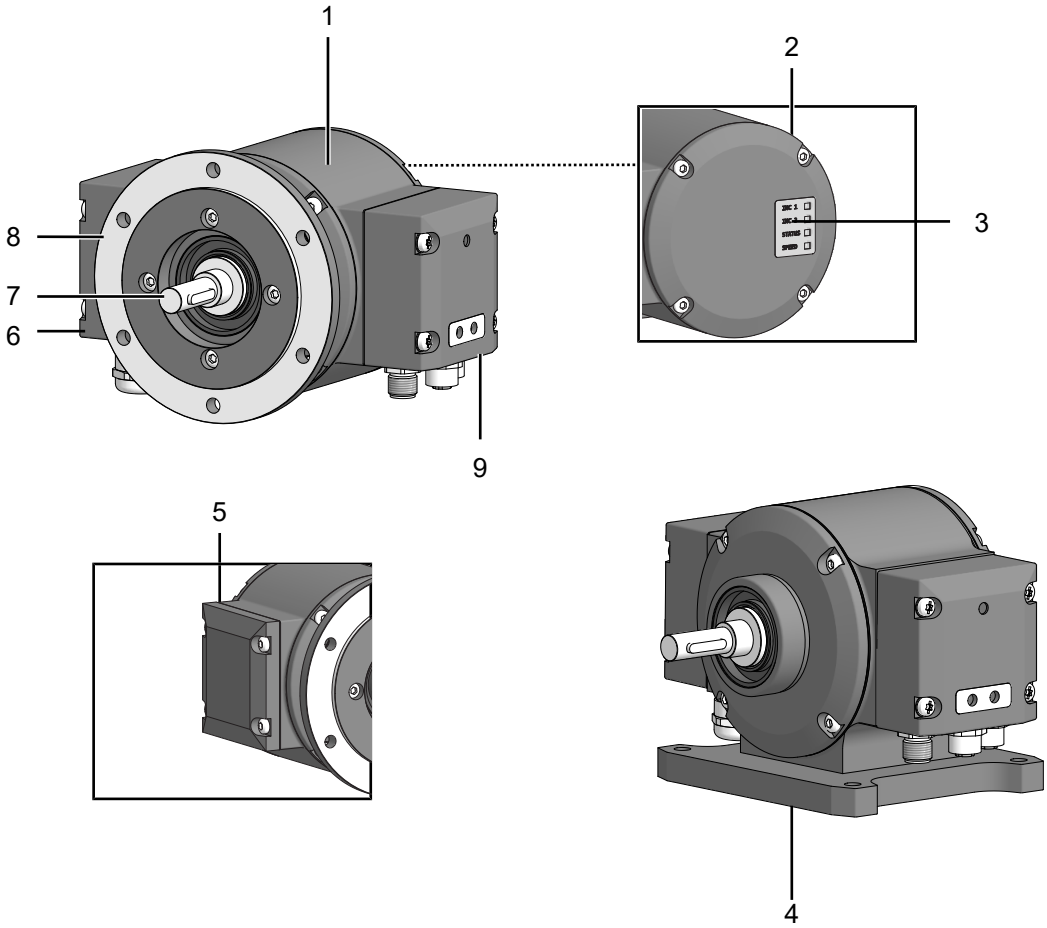

Ill. 1: Description PMG10

1	Housing	2	Cover
3	LED activity indicator	4	Housing base B3 (according to product variant)
5	Blind cover (device without additional output, without speed switch and without programming interface)	6	Additional incremental output (optional), speed switch (optional), programming interface (PMG10P only)
7	Solid shaft with key	8	EURO flange B10 (according to product variant)
9	Bus terminal box		

4.2 Mounting accessories (not included)

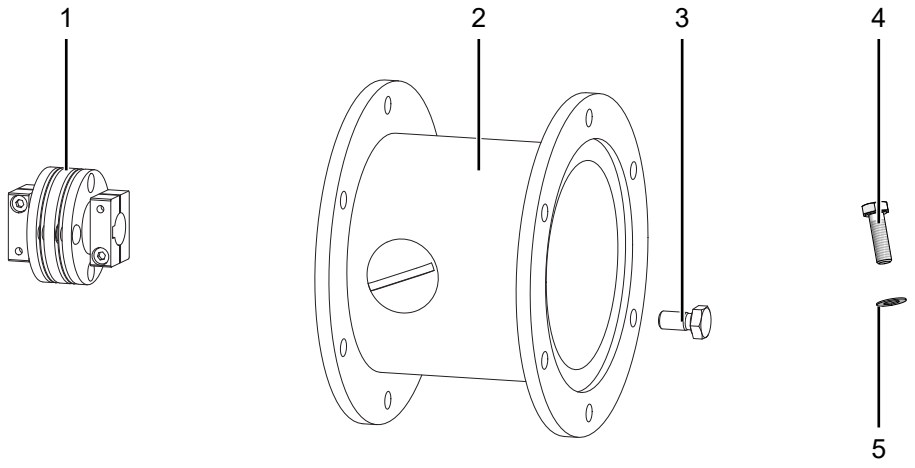

Ill. 2: Mounting accessories

1	Spring washer coupling K35, available as accessory	2	Mounting device, customer-specific (for EURO flange B10 mount)
3	Mounting screw M6x16 mm for attachment device, ISO 4017 (for EURO flange B10 mount)	4	M6x20 mm screw for fastening the housing base, ISO 4017 (for housing base B3 mount)
5	Washer B6 to fasten housing base, DIN 137 (for housing base B3 mount)		

4.3 Required tools

- 2.5 mm
- 10 mm, 22 mm
- T20

5 Installation

NOTICE

Equipment damage due to mechanical shock

Strong vibration may lead to overload by constraining force.

a) Never apply force. If properly assembled, everything fits smoothly together.

b) Use only suitable tools for disassembly (see chapter on disassembly).

NOTICE

Equipment damage by adhering liquids

Sticky liquids may damage sensing unit and ball bearings. Disassembling a device which is stuck to the axis can lead to destruction.

a) Do not use adhesive liquids to fasten the device.

5.1 Mounting with EURO flange B10

5.1.1 Attach coupling onto encoder shaft

INFO

Baumer recommends to use the Baumer Hübner K 35 spring disc coupling to connect the rotary encoder and the drive shaft of the following device. The Baumer Hübner K 35 spring disc coupling can be pushed onto the drive shaft without axial pressure.

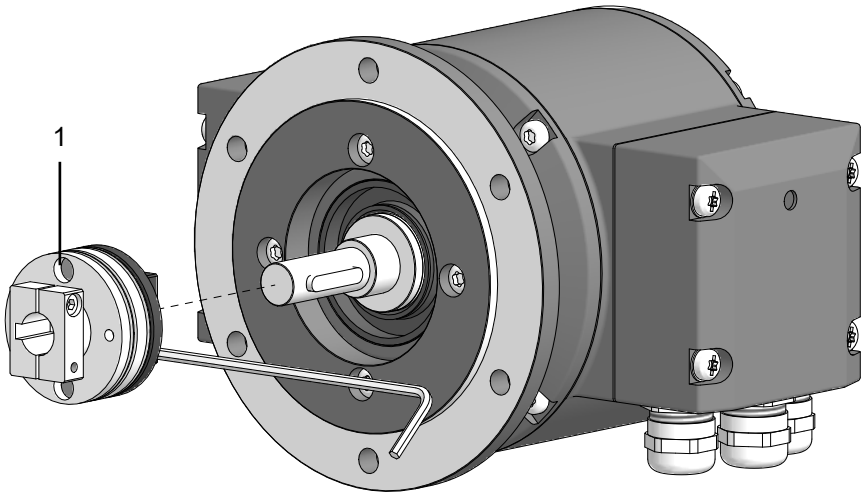

Ill. 3: Attach coupling onto encoder shaft

1	Coupling

Tools

- 2.5 mm

Instruction:

a) Attach the coupling onto the encoder shaft according to the related mounting instructions.

b) When using the K 35 spring washer of Baumer Hübner, consider the maximum permitted tolerances for mounting errors.

c) Fasten the coupling at the specified torque (K 35: Mt = 1 Nm (plastic side), Mt = 1.3 ± 10% Nm (metal side)). Observe the remarks in the spring washer assembly instructions.

Also see about this

Maximum permitted tolerances for mounting errors when using the Baumer Hübner K 35 spring washer [▸ 17]

5.1.2 Mounting encoder onto drive shaft

⚠ DANGER

Injuries caused by shaft rotation

Hair and clothing may get caught in rotating shafts which may lead to serious personal injury.

a) Make sure the device is idle.

b) Before performing any work at the device, make sure power supply is and remains disconnected.

⚠ DANGER

Explosion

Sparks may cause fire or explosion.

a) Do not use the device in the near vicinity of explosive or highly flammable materials.

NOTICE

Equipment damage by mechanical overload

Mounting under tension may cause overload by constraining forces.

a) Observe the mounting instructions.

b) Observe the specified distances and/or angles.

NOTICE

Ball bearing damage caused by hard impacts on coupling

Hard shaft impacts imposed on parts of the coupling can damage the ball bearings and therefore are not permitted. If properly selected, the components can be easily assembled without applying any axial pressure.

a) Otherwise, check and correct the dimensions and tolerances.

NOTICE

Severe runout errors of the drive shaft reduce service life and may cause angular errors.

Severe runout errors of the drive shaft cause vibrations that cut down on the encoder service live and may cause angular errors.

a) Keep runout errors of drive shaft down to a minimum (recommended: ≤ 0.03 mm; maximum: ≤ 0.2 mm).

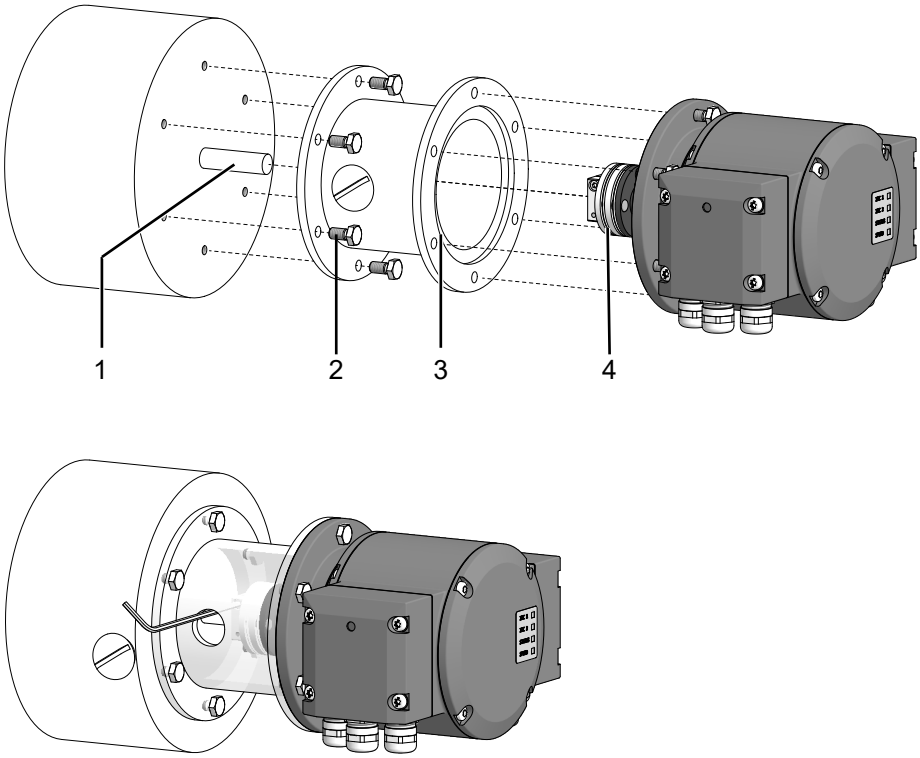

Ill. 4: Installing encoder, mounting device and coupling

1	Drive shaft	2	Mounting screw M6x16 mm for attachment device (ISO 4017)
3	Attachment device (customized)	4	Coupling

Tools

- 2.5 mm
- 10 mm

Instruction:

a) Prior to installation, check the drive runout error and dimensions.

b) Mount the encoder in a way ensuring the electrical connection is protected against direct water ingress.

c) Apply grease onto the drive shaft.

d) Mount the attachment device (customer-specific) to the drive using the fastening screws.

e) Push coupling onto the encoder shaft and tighten to the specified torque.
K35 permitted tightening torque:
Mt = 1 ±10 % Nm (plastic side)
Mt = 1.3 ±10 % Nm (metal side)

f) Mount the encoder using suitable screws, e.g. M6x16 mm (ISO 4017) onto the B10 flange of drive or attachment device (customer-specific).

g) Fasten the coupling on the drive shaft.
K35 Permitted tightening torque:
Mt = 1 ±10 % Nm (plastic side)
Mt = 1.3 ±10 % Nm (metal side)
Observe the remarks in the data sheet and the coupling assembly instructions.

5.2 Mounting with base B3

5.2.1 Attach coupling onto encoder shaft

INFO

Baumer recommends to use the Baumer Hübner K 35 spring disc coupling to connect the rotary encoder and the drive shaft of the following device. The Baumer Hübner K 35 spring disc coupling can be pushed onto the drive shaft without axial pressure.

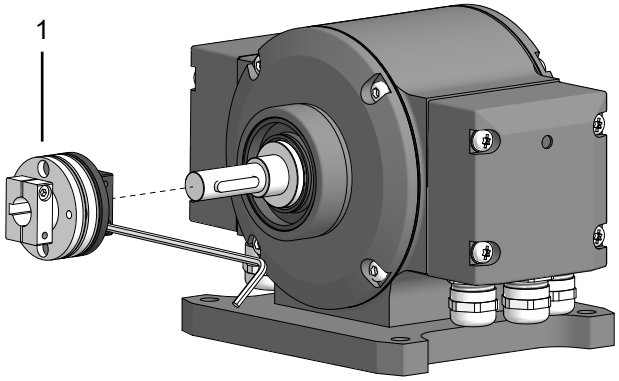

Ill. 5: Attach coupling onto encoder shaft

1	Coupling

Tools

- 2.5 mm

Instruction:

a) Mount the coupling on the encoder shaft , observe the related mounting instructions.

b) When using the K 35 spring washer of Baumer Hübner, consider the maximum permitted tolerances for mounting errors.

c) Fasten the coupling at the specified torque (K 35: Mt = 1 Nm (plastic side), Mt = 1.3 ± 10% Nm (metal side)). Observe the remarks in the spring washer assembly instructions.

Also see about this

Maximum permitted tolerances for mounting errors when using the Baumer Hübner K 35 spring washer [▸ 17]

5.2.2 Mounting encoder onto drive shaft

⚠ DANGER

Injuries caused by shaft rotation

Hair and clothing may get caught in rotating shafts which may lead to serious personal injury.

a) Make sure the device is idle.

b) Before performing any work at the device, make sure power supply is and remains disconnected.

⚠ DANGER

Explosion

Sparks may cause fire or explosion.

a) Do not use the device in the near vicinity of explosive or highly flammable materials.

NOTICE

Severe runout errors of the drive shaft reduce service life and may cause angular errors.

Severe runout errors of the drive shaft cause vibrations that cut down on the encoder service live and may cause angular errors.

a) Keep runout errors of drive shaft down to a minimum (recommended: ≤ 0.03 mm; maximum: ≤ 0.2 mm).

NOTICE

Equipment damage by mechanical overload

Mounting under tension may cause overload by constraining forces.

a) Observe the mounting instructions.

b) Observe the specified distances and/or angles.

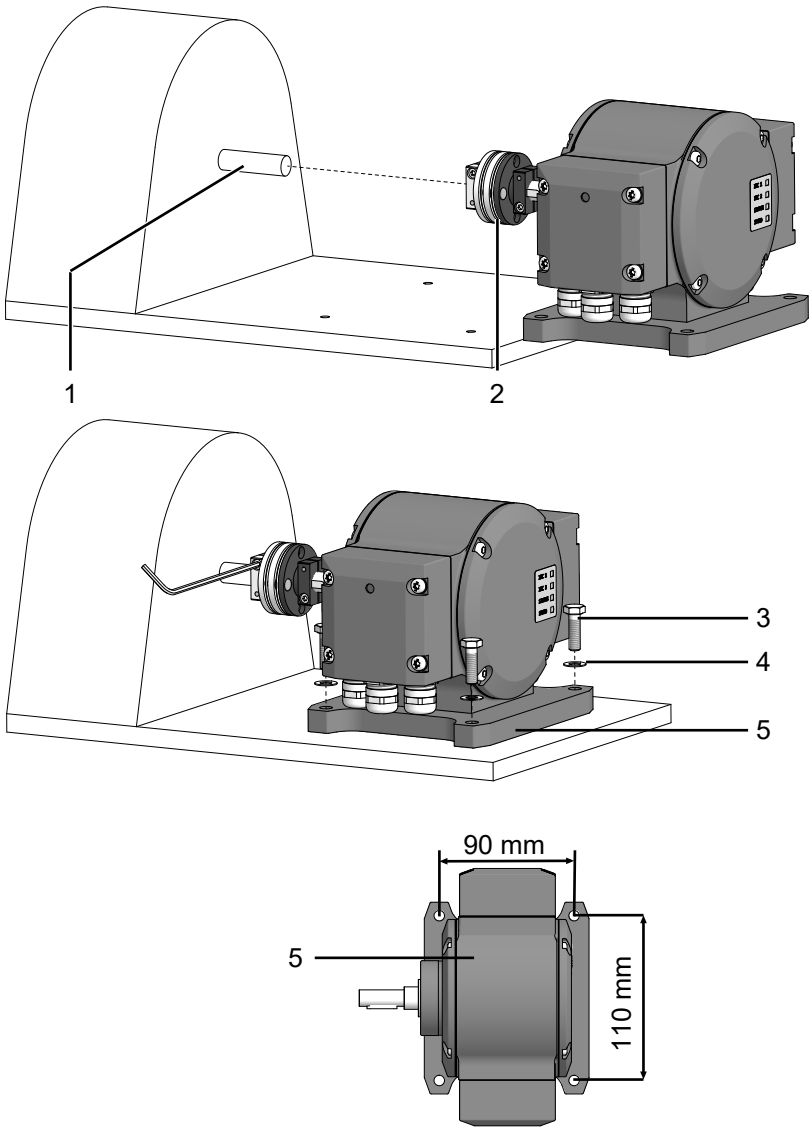

Ill. 6: Mounting encoder onto drive shaft

1	Drive shaft	2	Coupling
3	M6x20 mm screw for fastening the housing base (ISO 4017)	4	Washer B6 for fastening the housing base (DIN 137)
5	Housing foot (according to product variant)		

Tools

- 2.5 mm
- 10 mm

Instruction:

a) Prior to installation, check the drive runout error and dimensions.

b) Mount the encoder in a way ensuring the electrical connection is protected against direct water ingress.

c) Apply grease onto the drive shaft.

d) Push the encoder coupling onto the shaft of the drive.

e) In doing so, align encoder and drive shaft to minimize parallel offset and angular errors.

f) Mount the encoder to the base using the screws (4x) and washers (4x).

g) Fasten the coupling onto the shaft of the drive at a torque of 1.3 ±10 % Nm.
Observe the remarks in the data sheet and the coupling assembly instructions.

5.3 Maximum permitted tolerances for mounting errors when using the Baumer Hübner K 35 spring washer

NOTICE

Damage to the encoder ball bearings.

Hard impacts of the drive shaft imposed on coupling parts may damage the ball bearings.

a) Prevent any hard impacts of the drive shaft on coupling parts.

Instruction:

a) Mount the drive with small angular error and parallel offset.

b) Note the following allowable mounting errors:

The figure shows the device with EURO flange B10, the same maximum permissible mounting errors must be observed for the device with housing foot B3.

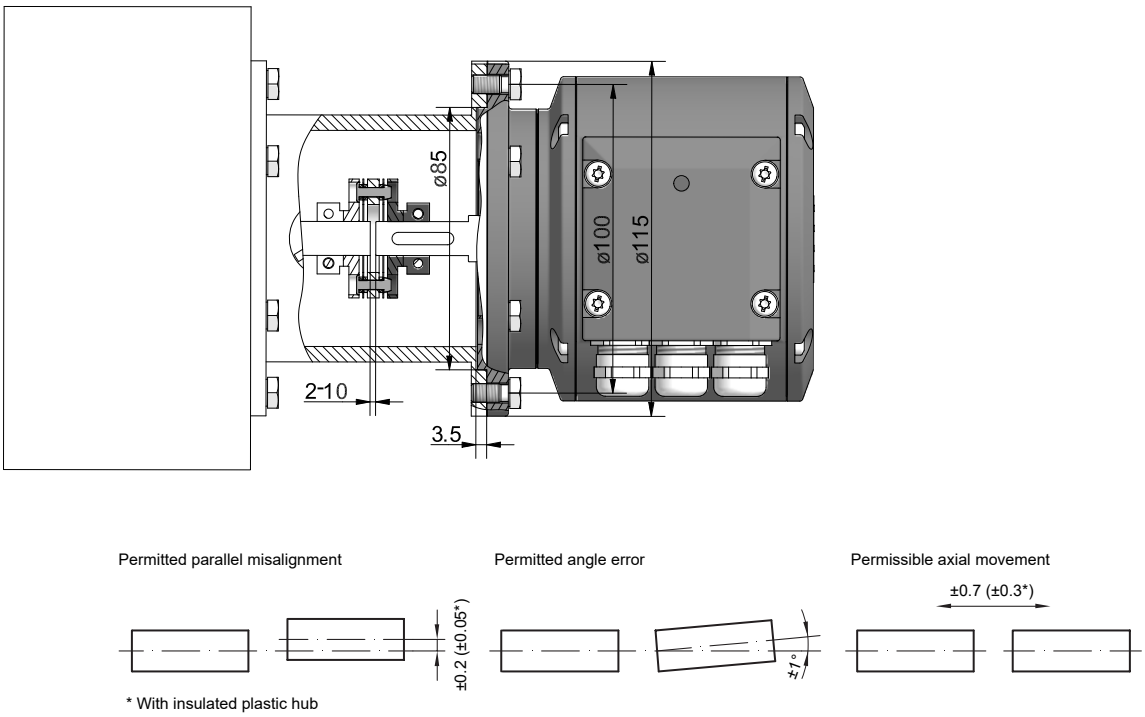

Ill. 7: Permissible mounting errors (dimensions in mm)

5.4 Notes when using a claw coupling (e.g. ROTEX®)

NOTICE

Damage to the rotary encoder due to incorrect mounting of the claw coupling.

Blocking of the two coupling halves (coupling claws lie face to face) can damage the rotary encoder.

a) Make sure that the coupling claws do not block.

b) Make sure that there is no direct axial stop on the device shaft.

Instruction:

- Observe the distances L and L1 when mounting the claw coupling.

These distances apply to the device with EURO flange B10 with a depth caliper.

Instruction:

- When mounting with housing foot B3, keep the distance L1.

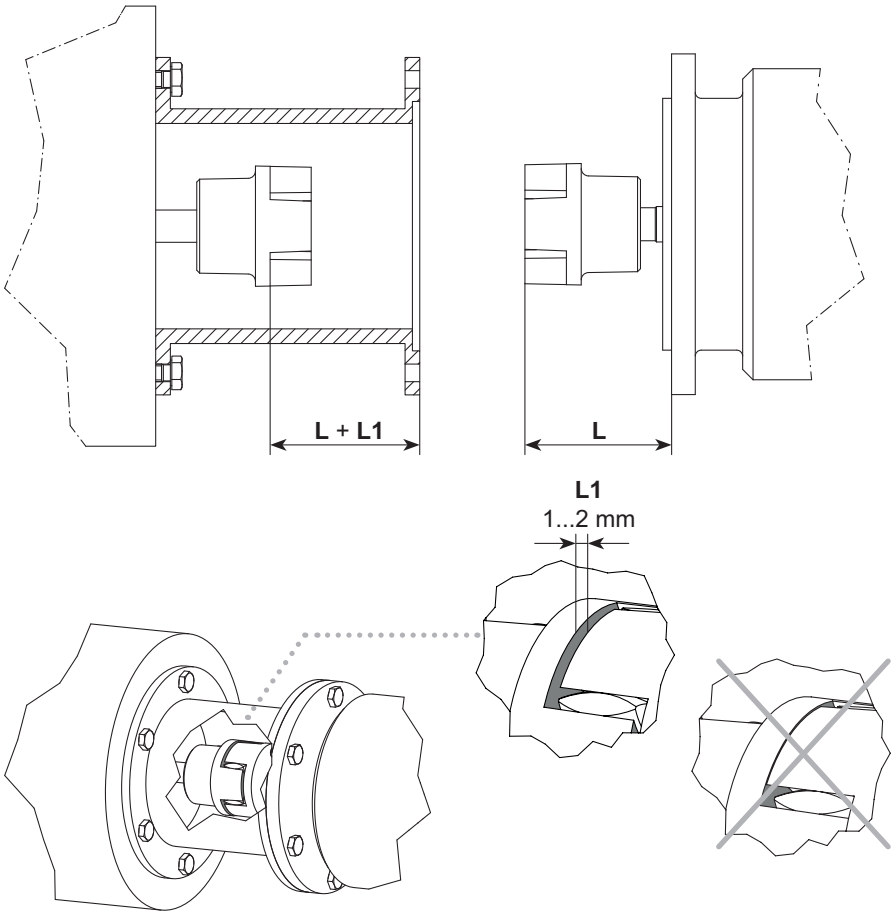

Ill. 8: Correct assembly of a claw coupling

6 Electrical installation

⚠ DANGER

Injury by to secondary damage

Encoder failure or incorrect signals may entail system control errors.

a) Eliminate secondary encoder damage by the relevant safety precautions in the downstream electronics.

NOTICE

Sensor damage due to faulty power supply.

The sensor can be damaged due to faulty power supply.

a) Operate the sensor only with protected low voltage and safe electrical isolation of protection class III.

NOTICE

Sensor damage or unintended operation due to work on live parts.

Work on live parts may lead to unintentional operation.

a) Disconnect the power before carrying out any cable.

b) Disconnect the power before connecting or disconnecting electrical connections.

NOTICE

Sensor damage by excessive switching voltage.

The sensor's overload limit is for protection only and not intended as limit for the permanently switching voltage.

a) Make sure that the maximum permitted switching voltage is not exceeded.

6.1 EtherNet/IP

INFO
Use only supply cables and connectors compliant to the EtherNet/IP guideline.

6.1.1 Features EtherNet/IP

INFO
Detailed instructions for the EtherNet/IP interface as well as the XML file can be found on the Baumer website www.baumer.com.

Fieldbus protocol	EtherNet/IP
Device profile	Encoder Device, Type 22hex, according to CIP specification
Features	100 MBaud Fast Ethernet Programmable IP address Automatic IP address assignment (DHCP) Direction of rotation, resolution, total resolution and preset programmable according to CIP specification
Process data	Position value, warning flag, alarm flag Assembly Instances 1 and 2 according to CIP specification

6.1.2 Pin assignment EtherNet/IP

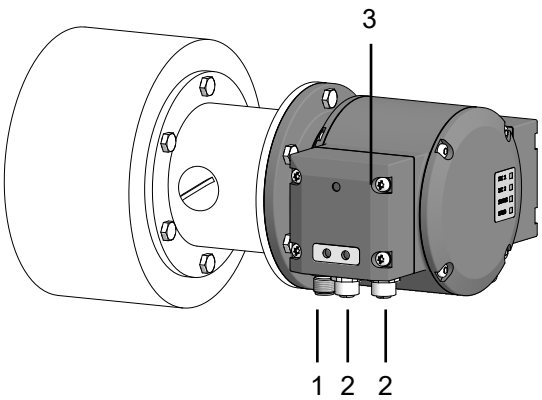

Ill. 9: Terminals PMG10 EtherNet/IP

1	Male connector (4-pin, A-encoding)	2	Mating connector (4-contact, D-encoding)
3	Bus terminal box		

6.1.2.1 Mating connector (4-pin, A-coded)

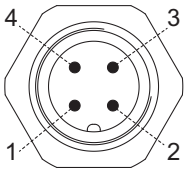

Ill. 10: Mating connector (4-pin, A-coded)

Pin	Connection	Description
1	UB	Operating voltage 10-30 V DC
2	-	Do not use
3	GND	Ground connection for UB
4	-	Do not use

6.1.2.2 Mating connector (4-contact D-coded)

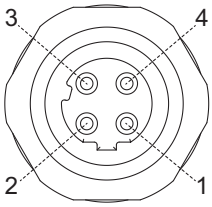

Ill. 11: Mating connector (4-contact, D-coded)

PIN	Connection	Description
1	TxD+	Data transmitted +
2	RxD+	Data received +
3	TxD-	Data transmitted -
4	RxD-	Data received -

6.1.3 View in bus junction box

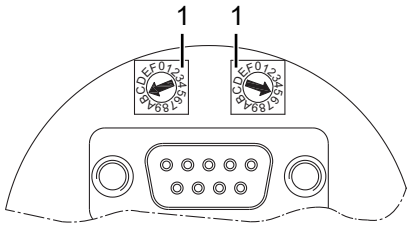

1	IP address setting

6.1.4 Set IP address

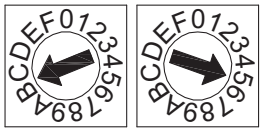

Instruction:

- Set the IP address via the HEX speed switch.
  Example: IP address $B5_{hex}$
  Configuration via DHCP: 00_{hex}

6.2 Terminal box

6.2.1 Pin assignment at terminal box

Connection	Description
Ub [I]	Operating voltage
0V [I]	Ground connection
A+ [I]	Output signal channel 1
A- [I]	Output signal channel 1 inverted
B+ [I]	Output signal channel 2 (90° shift to channel 1)
B- [I]	Output signal channel 2 inverted
R+ [I]	Zero pulse (reference signal)
R- [I]	Zero pulse inverted
nE+ [I]	System OK+ / Error output
nE- [I]	System OK / Error output inverted
SP+ [II]	DSL_OUT1 / speed switch (open collector [III] or semiconductor relay [III])
SP- [II]	DSL_OUT2 / Speed switch (0 V [III] or semiconductor relay [III]
SA [IV]	RS485+ / programming interface
SB [IV]	RS485 / programming interface
dnu	do not use

[I] Additional output incremental (optional)

[II] Speed switch (optional)

[III] According to product variant

[IV] Programming interface (programmable product variant only)

6.2.2 Output signals additional incremental output (optional)

At positive rotating direction

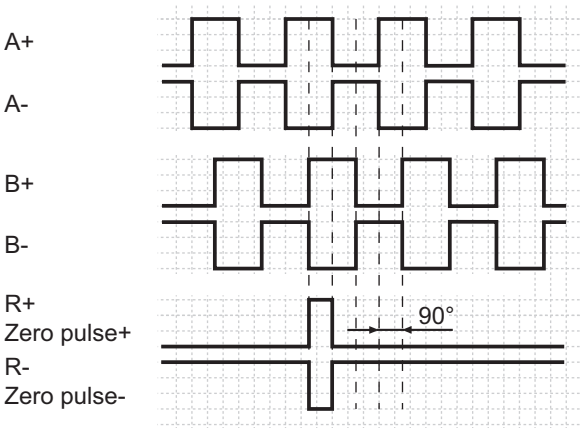

Ill. 12: Output signals with positive direction of rotation (zero pulse R+ and R- are only available at additional output II)

6.2.3 Switching level additional output incremental (optional)

Switching level	TTL/RS422	TTL/HTL (Vin = Vout) [I]
High/Low	≥ 2,5 V / ≤ 0,5 V	▪ ≥ 2,5 V / ≤ 0,5 V (TTL) ▪ ≥ Ub − 3 V / ≤ 1,5 V (HTL)
Transmission length	≤ 550 m bei 100 kHz	▪ ≤ 550 m bei 100 kHz (TTL) ▪ ≤ 350 m bei 100 kHz (HTL)
Output frequency	≤ 600 kHz	▪ ≤ 600 kHz (TTL) ▪ ≤ 350 kHz (HTL)

[I] The TTL/HTL output (Vin = Vout) at the additional output II incremental is galvanically isolated and requires a separate voltage supply.

Tab. 1: Switching level additional output incremental (optional)

6.2.4 Programming interface (only for programmable variant)

Encoder parameters such as additional output, switch-off and switch-on speeds or also the switching hysteresis can be changed and read out via connection SA and SB. The Z-PA.SDL1 WLAN adapter can be used for encoder access via web browser.

Also see about this

Z-PA.SDL.1 WLAN adapter: Programming device for HMG10P/PMG10P [▸ 27]

6.2.5 LED activity indicator

LED	red	green
INC1	No function	No function
INC2 (additional output incremental	▪ Undervoltage ▪ Overload ▪ Excess temperature	OK
Status	Internal error	OK
Speed	Speed higher than switching speed (overspeed)	Speed below switching speed

Tab. 2: LED activity indicator

6.2.6 Output switching behavior Speed switch (optional)

INFO

Default switching speed is 6000 rpm for HMG10P and PMG10P. HMG10 and PMG10 without programming interface come with the individually ordered permanent switching speed.

Event	Speed switching output state
During initialization	High-impedance (overspeed)
After initialization and speed being ≤ -ns (off)	High-impedance (overspeed)
-ns (off) < speed ≤ -ns (on)	Status unchanged Device rotation within this speed range during initialization results in status low-impedance (no overspeed) after initialization
-ns (on) < speed ≤ +ns (on)	Low impedance (No overspeed)
+ns (on) ≤ speed < +ns (off)	Status unchanged Device rotation within this speed range during initialization results in status low-impedance (no overspeed) after initialization
+ns (off) ≤ speed	High-impedance (overspeed)

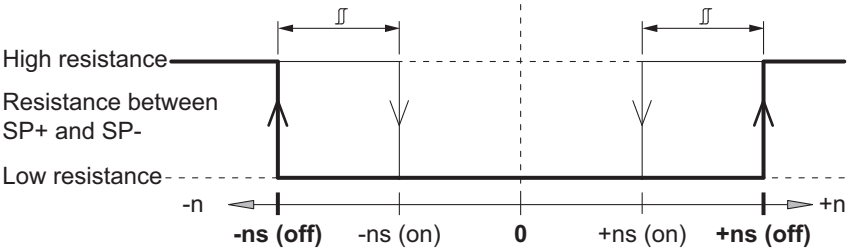

n = Speed

+ns (off) = Switch-off speed at shaft rotation in positive rotating direction*
-ns (off) = Switch-off speed at shaft rotation in negative rotating direction*

Switching hysteresis ∫∫: 10...100 % (factory setting = 10 % min. 1 Digit)

+ns (on) = Switch-on speed at shaft rotation in positive rotating direction*
-ns (on) = Switch-on speed at shaft rotation in negative rotating direction*

6.2.7 Connecting the supply cable

NOTICE

Equipment damage due to dust or moisture

Inappropriate cable diameters may entail ingress of dust or moisture. In this case, the protection class is no longer ensured causing device failure or malfunction.

a) Use only appropriately sized cables to make sure the specified protection class is being ensured.

INFO

Connection cables are not included in delivery.

Tools

- t20
- 22 mm

Instruction:

a) Loosen the screws at the terminal box.

b) Lift the terminal box off the encoder.

c) Loosen the cable gland at the terminal box.

d) Insert the supply cables into the cable gland, let stick out approx. 50 mm of cable.

e) Assign the supply cables to the terminals.

f) Attach the cable gland to the terminal box.

g) Mount the terminal box at the encoder. For doing so, tighten the screws with a torque of 2-3 Nm.

6.2.8 Terminals assignment

NOTICE

Operating voltage present at the outputs results in encoder damage.

The encoder might be damaged by any operating voltage being present at the outputs.

a) Make sure that no operating voltage is present at the outputs.

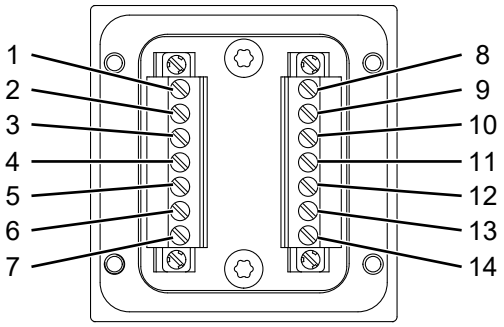

Ill. 13: Terminals assignment

1	dnu / SP+ [I]	2	dnu / A+ [II]
3	dnu / A− [II]	4	dnu / B+ [II]
5	dnu / B− [II]	6	Ub [II]
7	0 V [II]	8	dnu / SP− [I]
9	nE+ [II]	10	nE− [II]
11	dnu / R+ [II]	12	dnu / R− [II]
13	dnu / SA [III]	14	dnu / SB [III]

[I] Speed switch (optional)

[II] Additional output incremental (optional)

[III] Programming interface (programmable product variant only)

6.3 Z-PA.SDL.1 WLAN adapter: Programming device for HMG10P/PMG10P

INFO

For detailed function descriptions refer to the WLAN adapter installation and operating instructions.

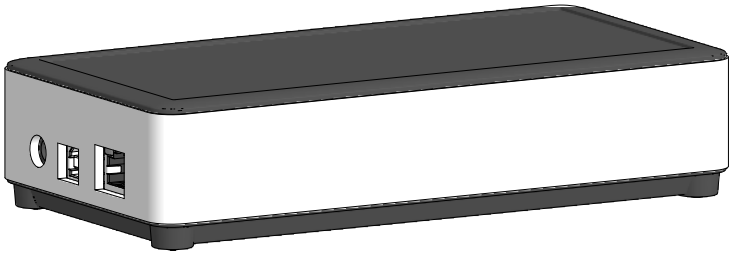

Ill. 14: Z-PA.SDL.1 WLAN adapter (ordering ref.: 11190106)

The Z-PA.SDL.1 WLAN adapter is for programming and monitoring the HMG10P/PMG10P encoder series.

The following encoder parameters enable parameterization (according to encoder version):

- Additional output (ppr number)
- Switch off / on speed
- Switching hysteresis

Programmer configuration and operation is via web browser.

7 Disassembly

NOTICE

Equipment damage due to mechanical impact

Strong vibration may lead to overload by constraining force.

a) Never apply force. If properly performed, all components can be uninstalled smoothly.

b) Use only suitable tools to uninstall.

NOTICE

Equipment damage by adhering liquids

Sticky liquids may damage sensing unit and ball bearings. Disassembling a device which is stuck to the axis can lead to destruction.

a) Do not use adhesive liquids to fasten the device.

7.1 Uninstall when using EURO flange B10

7.1.1 Uninstall encoder from drive shaft

⚠ DANGER

Burns caused by heat

The device heats up at high speeds. There is a risk of getting burned after use.

a) Avoid overheating the device.

b) Wear suitable protective gloves and clothing.

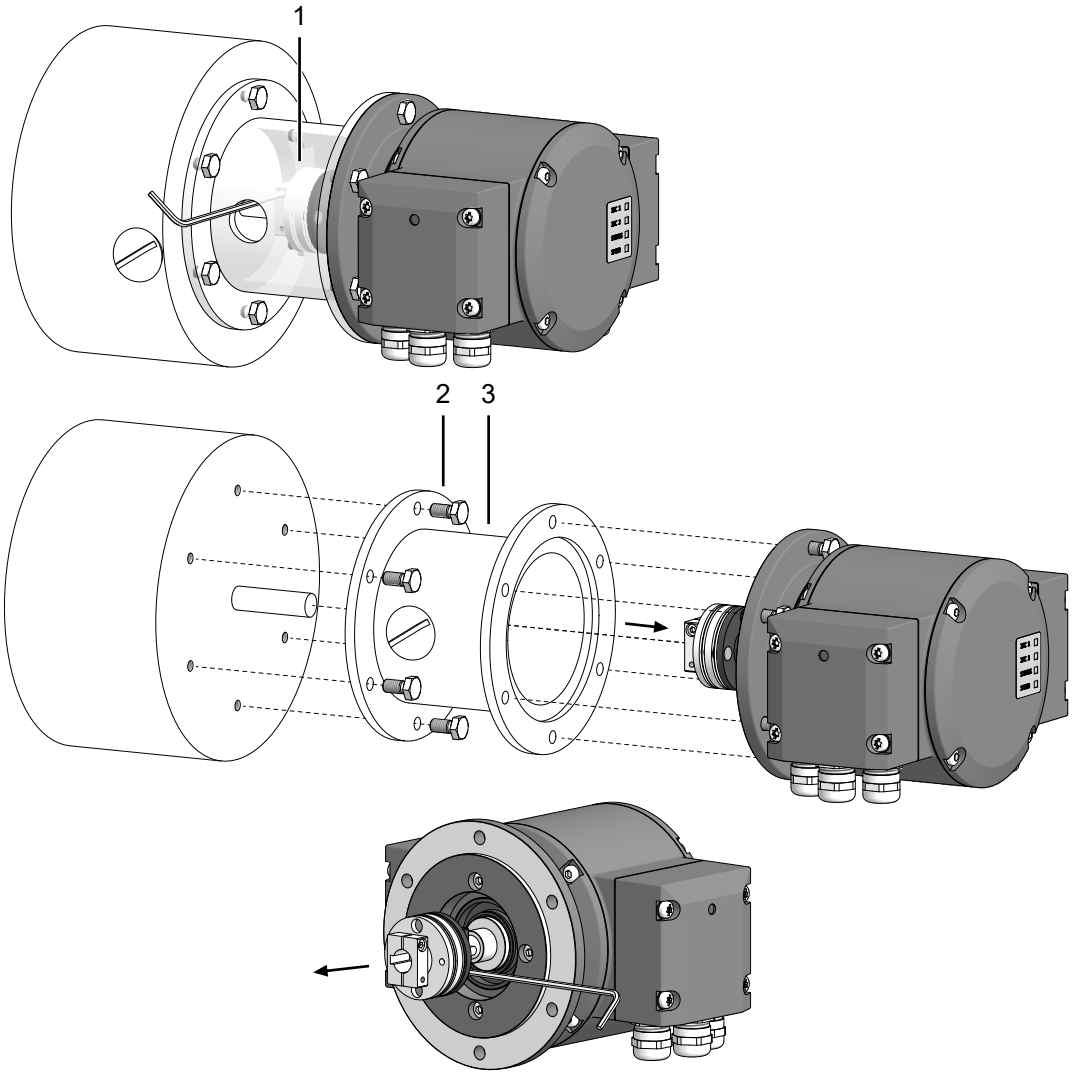

Ill. 15: Uninstall encoder, mounting device and coupling

1	Coupling	2	Mounting screw M6x16 mm for attachment device (ISO 4017)
3	Attachment device, customized		

Tools

- 2.5 mm
- 10 mm

Instruction:

a) Disconnect all electrical connections.

b) Loosen the the coupling on the drive shaft.
Observe the notes in the data sheet and the coupling assembly instructions.

c) Loosen the encoder from the drive's attachment device.

d) Remove the encoder drive's attachment device.

e) Uninstall the attachment device.

f) Remove the coupling from the encoder.

7.2 Uninstall with base B3

7.2.1 Uninstall encoder from drive shaft

⚠ DANGER

Burns caused by heat

The device heats up at high speeds. There is a risk of getting burned after use.

a) Avoid overheating the device.

b) Wear suitable protective gloves and clothing.

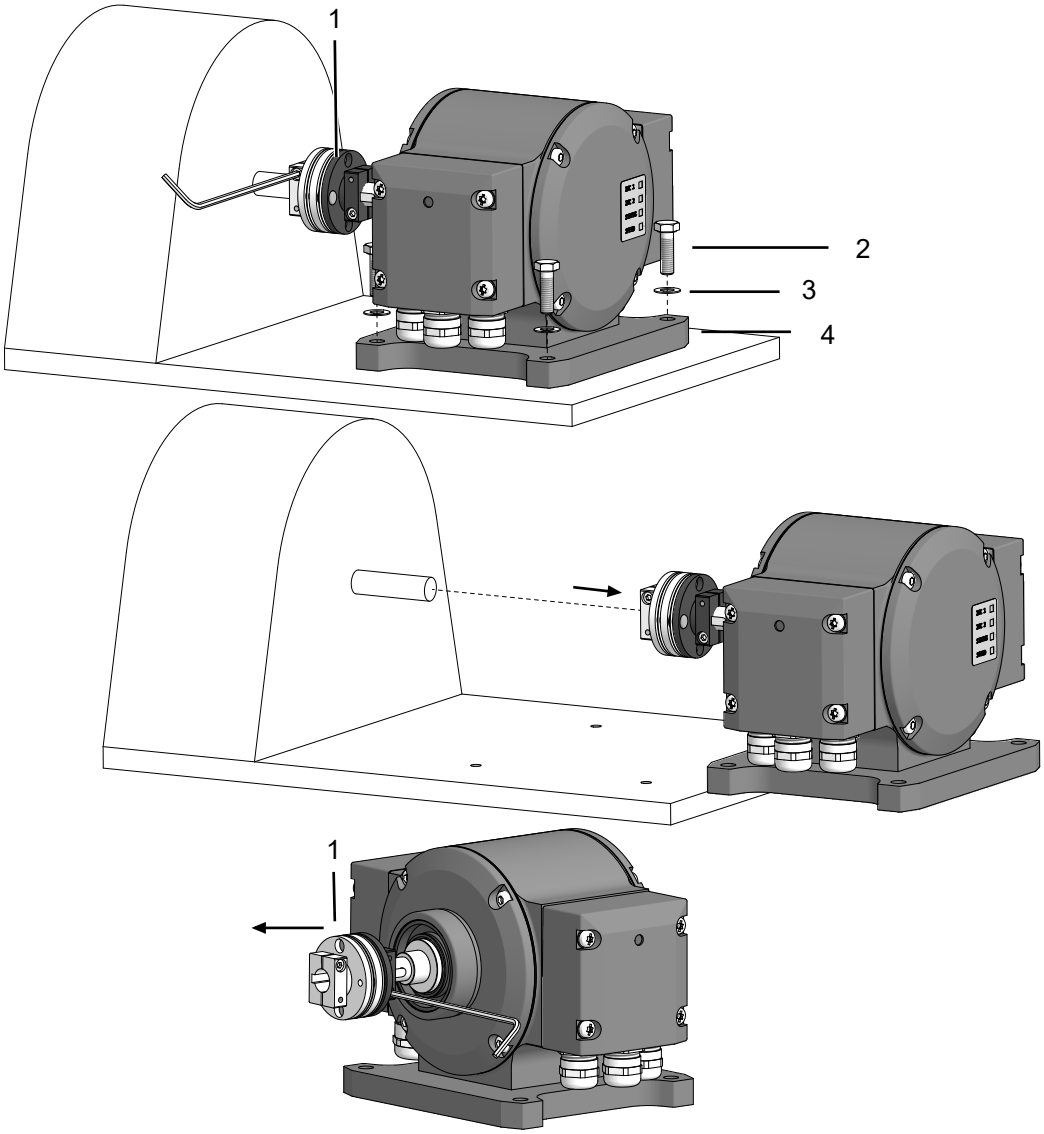

Ill. 16: Uninstall encoder, mounting device and coupling

1	Coupling	2	M6x20 mm screw for fastening the housing base (ISO 4017)
3	Washer B6 for fastening the housing base (DIN 137)	4	Housing base

Tools

- ○ 2.5 mm
- ⬡ 10 mm

Instruction:

a) Disconnect all electrical connections.

b) Loosen the the coupling on the drive shaft.
Observe the notes in the data sheet and the coupling assembly instructions.

c) Remove the encoder from the base.

d) Remove the coupling from the encoder.

8 Technical data

	PMG10
Electrical Data	
Operating voltage Ub	10-30 V DC (Ub (Bus)) 4,75-30 V DC (Ub (Ink))
Short-circuit proof	Yes
Operating current without load	≤ 200 mA
Initializing time	≤ 500 ms after switch-on
Sensing principle	Magnetic
Fieldbus interface	EtherNet/IP
Data rate (programming interface)	100 Mbit/s
User address	HEX rotary switch in the bus terminal box or with BOOTP/DHCP tool
Steps per turn	8192 / 13 Bit
Number of turns	65536 / 16 Bit
Incremental output	Rectangle TTL/HTL, TTL/RS422
Interference immunity	see data sheet and declaration of conformity
Interference emission	see data sheet and declaration of conformity
Programming interface	RS485 (≤ 600 m) [I]
Programmable parameters	Bus system (see *Features EtherNet/IP [▶ 20]*) Additional output (ppr number) [I] Switch off / on speed [I]
Diagnostic functions	Position and parameter errors
LED status indicator	DUO LED and Link/Activity LEDs in bus terminal box 4 LEDs at rear of the device
Approvals	see data sheet and declaration of conformity
Electrical data (Speed switch)	
Switching accuracy	±2 % (or 1 digit)
Switching outputs	1 output (Open-collector [II] or semiconductor relay [II])
Output switching performance	30 V DC; ≤ 100 mA
Switching delay	≤ 20 ms
Mechanical	
Dimensions (flange)	ø 115 mm
Shaft type	ø 11 mm solid shaft
Flange	EURO flange B10
Protection class DIN EN 60529	IP66/IP67
Operating speed	≤6000 rpm
Switching speed range	ns (off) = ±2 ... ±6000 rpm, (PMG10P: factory setting 6000 rpm)

	PMG10
Operating torque typically.	10 Ncm
Rotor torque	1 kgcm^2
Maximum permitted shaft load	≤ 450 N axial ≤ 650 N radial
Materials	Housing: aluminium alloy Shaft: stainless steel
Operating temperature	−40 ...+85 °C
Relative humidity	95 % not condensing
Resistance	IEC 60068-2-6 Vibration 30 g, 10-2000 Hz IEC 60068-2-27 Shocks 400 g, 1 ms
Corrosion protection	see data sheet and declaration of conformity
Weight approx.	2,7 kg [II]
Connection	Bus connection terminal box Terminal box [II]

[I] Programmable product variant only

[II] According to product variant

8.1 Solid shaft encoder dimensions with EURO flange B10

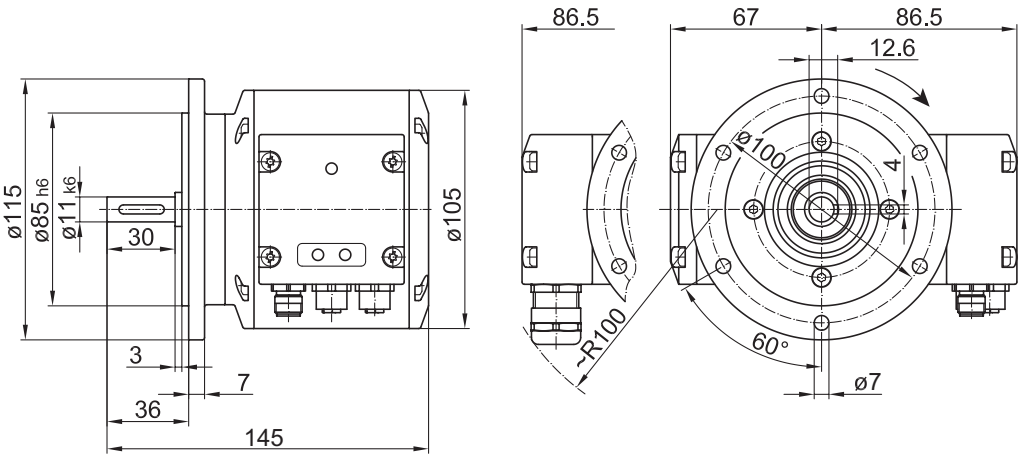

Ill. 17: Solid shaft encoder dimensions with EURO flange B10 (in mm unless specified otherwise)

8.2 Solid shaft encoder dimensions with housing base B3

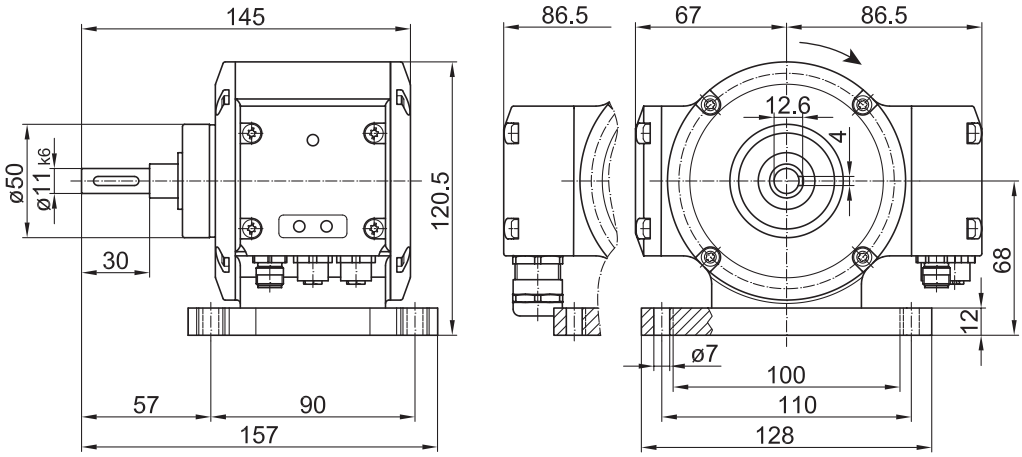

Ill. 18: Solid shaft encoder dimensions with housing base B3 (all in mm unless specified otherwise)

List of illustrations

Ill. 1 Description PMG10 ... 9
Ill. 2 Mounting accessories ... 10
Ill. 3 Attach coupling onto encoder shaft ... 11
Ill. 4 Installing encoder, mounting device and coupling ... 13
Ill. 5 Attach coupling onto encoder shaft ... 14
Ill. 6 Mounting encoder onto drive shaft ... 16
Ill. 7 Permissible mounting errors (dimensions in mm) ... 17
Ill. 8 Correct assembly of a claw coupling ... 18
Ill. 9 Terminals PMG10 EtherNet/IP ... 20
Ill. 10 Mating connector (4-pin, A-coded) ... 21
Ill. 11 Mating connector (4-contact, D-coded) ... 21
Ill. 12 Output signals with positive direction of rotation (zero pulse R+ and R- are only available at additional output II) ... 22
Ill. 13 Terminals assignment ... 26
Ill. 14 Z-PA.SDL.1 WLAN adapter (ordering ref.: 11190106) ... 27
Ill. 15 Uninstall encoder, mounting device and coupling ... 29
Ill. 16 Uninstall encoder, mounting device and coupling ... 31
Ill. 17 Solid shaft encoder dimensions with EURO flange B10 (in mm unless specified otherwise) ... 34
Ill. 18 Solid shaft encoder dimensions with housing base B3 (all in mm unless specified otherwise) ... 35

144202251

Baumer
Passion for Sensors

www.baumer.com/worldwide