Baumer
Passion for Sensors

Pressure and continuous level measurement

PP20H-D1 IO-Link

Fully welded pressure sensor with hygienic connection

PP20H-2.#####.####.##202#.000

Preliminary

Overview

- All market typical hygienic connections available
- Resistant to all common CIP cleaning media
- Condensate-proof measuring cell
- Available with IO-Link (in parallel to 4 ... 20 mA)
- Space-savng installations from DN 25 on
- Absolute pressure, relative pressure and vacuum measurement

Technical data

Performance characteristics	
Pressure type	Absolute Relative (gauged)
Compensated temperature range	-20 … 105 °C
Long term stability	≤ 0.2 % FSR/a
Max. measuring error	± 0.5 % FSR ± 1.0 % FSR , 0 … 0.4 bar Including zero-point and span error, non-linearity (by terminal base line), hysteresis and non-repeatability (EN 61298-2)
Max. measuring span	40 bar
Measuring range	-1 … 40 bar
Standard error of measurement (BFSL)	± 0.2 % FSR ± 0.5 % FSR , 0 … 0.4 bar Including non-linearity, hysteresis and non-repeatability according BFSL
Min. measuring span	0.4 bar
Rise time (10 ... 90 %)	≤ 20 ms
Temperature coefficient	≤ 0.2 % FSR/10 K , measuring span ≤ 0.2 % FSR/10 K , zero point
Process conditions	
Process temperature	-20 … 105 °C
Process pressure	Refer to section "Operating conditions"
Process connection	
Connection variants	Refer to section "Dimensional drawings"
Wetted parts material	AISI 316L (1.4404)
Wetted parts material, membrane	AISI 316L (1.4435)
Surface roughness (in contact with medium)	
Process connection	Ra ≤ 0.8 µm
Ambient conditions	
Operating temperature range	-20 … 50 °C

Ambient conditions	
Storage temperature range	-40 … 85 °C
Degree of protection (EN 60529)	IP 67 , with connector M12-A. 5-pin IP 69 , with appropriate cable
Insulation resistance	> 100 MΩ , 500 V DC
Bump (EN 60068-2-27)	100 g / 2 ms, 4000 impulses per axis and direction
Cold (EN 60068-2-1)	Ab: -40 °C, 2 h (not in operation)
Damp heat, cyclic (EN 60068-2-30)	Db: 55°C, Variant 1, 2 cycles (2 · 24 h)
Shock (EN 60068-2-27)	50 g / 11 ms, 100 g / 6 ms, 10 impulses per axis and direction
Vibration (sinusoidal) (EN 60068-2-6)	1.5 mm p-p (10 … 58 Hz), 10 g (58 Hz … 2 kHz), 10 cycles (2.5 h) per axis
Vibration, broad-band random (EN 60068-2-64)	0.1 g² / Hz, > 10 gRMS (20 Hz … 1 kHz), 30 min. per axis
Output signal	
Current output	4 … 20 mA , 3-wire
Short circuit protection	Yes
Shunt resistance	Rs ≤ (Vs - 8 V)/0.02 A
IO-Link interface	
IO-Link version	1.1
Device profile	Smart Sensor Profile
IO-Link port type	Class A
Baud rate	38,4 kbaud (COM2)
Process data (cyclic)	Pressure or temperature Switch state Scaling factor state of alert
Diagnostic data (acyclic)	Ambient pressure Device temperature CPU temperature power up time

2021-06-01 The product features and technical data specified do not express or imply any warranty. Technical modifications subject to change.

PP20H-D1 IO-Link

Fully welded pressure sensor with hygienic connection

PP20H-2.#####.####.##202#.000

Preliminary

Technical data

IO-Link interface	
Adjustable data (acyclic)	Offset settings Switch parameters Measuring mode
Dual Channel	IO-Link / Analogue Analogue / SIO Mode
Housing	
Style	Compact transmitter
Overall size	Refer to section "Dimensional drawings"
Material	AISI 316L (1.4404)
Electrical connection	
Connector	M12-A, 5-pin, stainless steel, IO-Link output

Power supply	
Voltage supply range	12 … 30 V DC , with 4 … 20 mA output signal 18 … 30 V DC , with IO-Link
Reverse polarity protection	Yes
Compliance and approvals	
EMC	EN 61000-6-2 EN 61000-6-3 EN 61326-2-3

Operating conditions

Measuring range (bar)				Proof pressure (bar)	Burst Pressure (bar)
-1 … 0	-1 … 1	0 … 0.4	0 … 1	5	10
-1 … 3	-1 … 5	0 … 2.5	0 … 4	10	20
	-1 … 9	0 … 6	0 … 10	20	40
	0 … 25			50	100
	0 … 40			80	160

Dimensional drawings (mm)

Housing

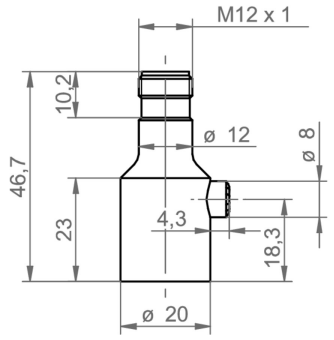

Short housing with connector M12-A

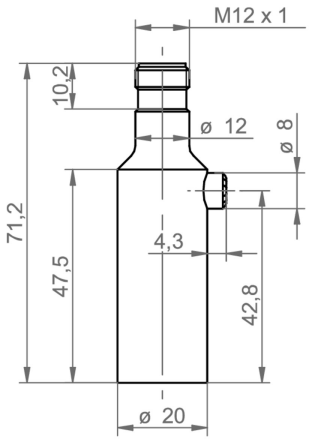

Long Housing with connector M12-A

The product features and technical data specified do not express or imply any warranty. Technical modifications subject to change.
2021-06-01

PP20H-D1 IO-Link

Fully welded pressure sensor with hygienic connection

PP20H-2.#####.####.##202#.000

Preliminary

Dimensional drawings (mm)

Process connection

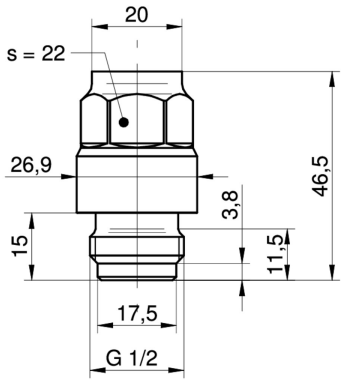

G51-41
G 1/2 A DIN 3852-E (BCID: G51)

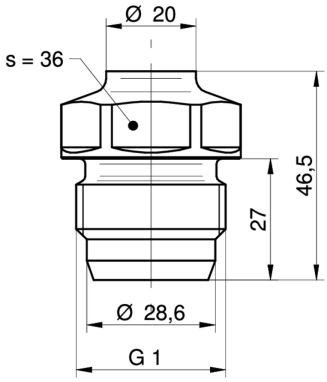

A04-44
G 1 A hygienic (BCID: A04)

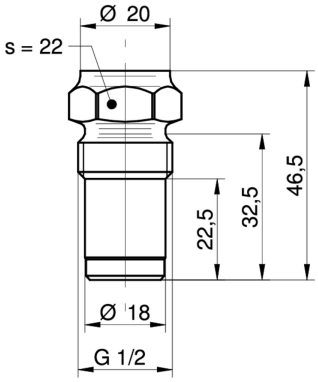

A03-48
G 1/2 A hygienic (BCID: A03)

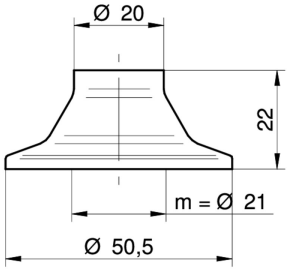

C03-53
Tri-Clamp Ø 50.5 (BCID: C03)

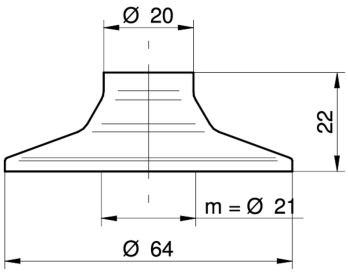

C05-54
Tri-Clamp Ø 64.0 (BCID: C05)

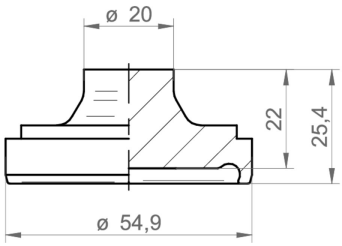

H03-59
DIN 11864-1-A (aseptic screwed union), DN 40 (BCID: H03)

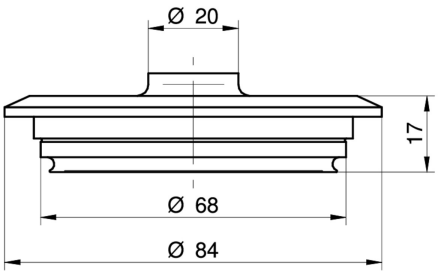

V02-61
Varivent® DN 32 … 125; 1 1/2" … 6" (Type N), Ø 68 (BCID: V02)

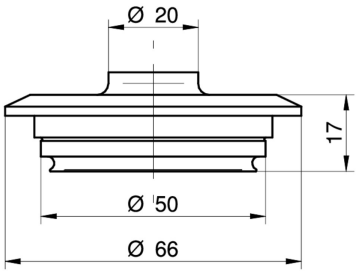

V01-62
Varivent® DN 25; 1" (Type F), Ø 50 (BCID: V01)

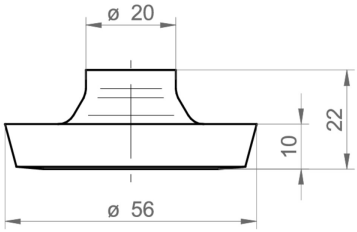

D03-65
DIN 11851 (dairy pipe connection), DN 40 (BCID: D03)

2021-06-01 The product features and technical data specified do not express or imply any warranty. Technical modifications subject to change.

PP20H-D1 IO-Link

Fully welded pressure sensor with hygienic connection

PP20H-2.#####.####.##202#.000

Preliminary

Dimensional drawings (mm)

Process connection

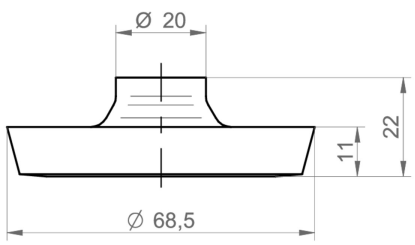

D04-66
DIN 11851 (dairy pipe connection), DN 50
(BCID: D04)

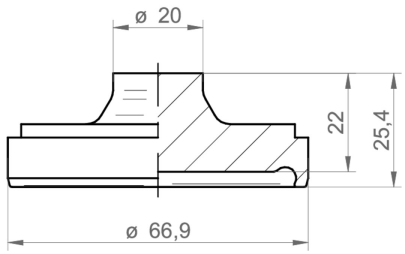

H04-68
DIN 11864-1-A (aseptic screwed union), DN
50 (BCID: H04)

Electrical connection

Output signal	Equivalent circuit	Electrical connection	Function	Pin assignment
4 … 20 mA (2-wire)	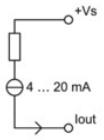	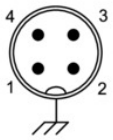	+Vs	1
			Iout	3
			Frame Ground	Plug thread
			n.c.	2, 4
IO-Link (3-wire)	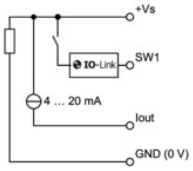	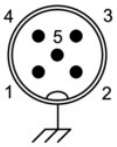	+Vs	1
			GND (0 V)	3
			SW1, IO-Link	4
			Iout	2
			Frame Ground	Plug thread
			n.c.	5

Ordering information

Ordering key - Configuration possibilities see website

	PP20H	-	2	.	#	###	#	.	D1	15	.	##	#	0	2	0	.	0	0	0
Product																				
PP20H																				
Housing material																				
Stainless steel 1.4404 AISI 316L			2																	
Accuracy																				
±1.0 % FS					1															
±0.5 % FS					3															

2021-06-01 The product features and technical data specified do not express or imply any warranty. Technical modifications subject to change.

PP20H-D1 IO-Link

Fully welded pressure sensor with hygienic connection

PP20H-2.#####.####.##202#.000

Preliminary

Ordering information

Ordering key - Configuration possibilities see website

	PP20H	-	2	.	#	###	#	.	D1	15	.	##	#	0	2	0	.	0	0	0
Measuring range																				
0 ... 0.4 bar (EN)						B11														
0...1 bar (EN)						B15														
0 ... 2.5 bar (EN)						B18														
0 ... 4 bar (EN)						B19														
0 ... 6 bar (EN)						B20														
0 ... 10 bar (EN)						B22														
0 ... 16 bar (EN)						B24														
0...25 bar (EN)						B26														
0 ... 40 bar (EN)						B27														
-1...0 bar (EN)						B59														
-1...1 bar (EN)						B73														
-1...3 bar (EN)						B76														
-1...5 bar (EN)						B77														
-1...9 bar (EN)						B79														
0...5 bar (EN)						B98														
Kind of pressure																				
Relative (gauged)							R													
Absolute							A													
Output signal																				
IO-Link Dual Ch., 4 … 20 mA V1									D1											
Output Connection																				
M12-A, 5-pin										15										
Process connection																				
G 1/2 A DIN 3852-E (G51)(2)												41								
G 1 A hygienic (A04)(2)												44								
G 1/2 A hygienic (A03)(2)												48								
ISO 2852 (Tri-Clamp), DN 25, Ø 50.5 (C03)(1)												53								
ISO 2852 (Tri-Clamp), DN 40; 51, Ø 64.0 (C05)(1)												54								
Varivent® DN 32 … 125; 1 1/2 … 6 (Type N), Ø 68 (V02)(3)												61								
Varivent® DN 25; 1 (Type F), Ø 50 (V01)(4)												62								
DIN 11864-1-A (aseptic screwed union), DN 50 (H04)(1)												68								
DIN 11864-1-A (aseptic screwed union), DN 40 (H03)(3)												59								
DIN 11851 (dairy pipe connection), DN 40 (D03)(1)												65								
DIN 11851 (dairy pipe connection), DN 50 (D04)(1)												66								
Process connection material																				
Stainless steel 1.4404 AISI 316L													2							
Stainless steel 1.4404 Ra0.4													3							
Seal																				
None														0						
Oil filling																				
NSF H1 listed (FDA approved)															2					
Display																				
Without display																0				
ATEX																				
Standard safety																		0		
Approvals																				
Standard approvals																			0	
Technology																				
Silicon																				0

The product features and technical data specified do not express or imply any warranty. Technical modifications subject to change.
2021-06-01

Ordering information

Ordering key - Configuration possibilities see website

(1) EHEDG only with special gasket
(2) EHEDG not included
(3) EHEDG included
(4) EHEDG not included, only for tank installation

2021-06-01 The product features and technical data specified do not express or imply any warranty. Technical modifications subject to change.